SINGLE STAGE REQUEST FOR PROPOSAL DOCUMENT

FOR

SELECTION OF BIDDER AS TRANSMISSION SERVICE PROVIDER THROUGH TARIFF BASED COMPETITIVE BIDDING PROCESS

TO

DEVELOP INTRA-STATE TRANSMISSION PROJECT

FOR

ESTABLISHMENT OF 400/220/132 kV AIS SAKOLI (DIST. BHANDARA)

ISSUED BY

REC Power Development and Consultancy Limited
(A wholly owned subsidiary of REC Limited)

Registered Office:
Core-4, SCOPE Complex,
7, Lodhi Road, New Delhi – 110 003
Email: vijay.kulkarni@recpdcl.in, tbcb@recpdcl.in

16.12.2025

REC Power Development and Consultancy Limited
(A wholly owned subsidiary of REC Limited)
Core-4, SCOPE Complex,
7, Lodhi Road, New Delhi – 110 003

Request for Proposal Document for selection of Bidder as Transmission Service Provider through tariff based competitive bidding process to establish Intra-State Transmission Project i.e. **"Establishment of 400/220/132 kV AIS Sakoli (Dist. Bhandara)"** is issued by REC Power Development and Consultancy Limited.

This RFP document is issued to -

M/s. _____

_____

_____

_____

_____

Chief Executive Officer

REC Power Development and Consultancy Limited
(A wholly owned subsidiary of REC Limited)

Email: …….

Place: ……

Date: ……

Signature: ……

REQUEST FOR PROPOSAL NOTIFICATION

REC Power Development and Consultancy Limited
(A wholly owned subsidiary of REC Limited)
Core-4, SCOPE Complex,
7, Lodhi Road, New Delhi – 110 003

1. The Government of Maharashtra vide its Gazette Notification No. Sankirna-0125/P.R.32/Urja-4 dated 09.04.2025 has notified REC Power Development and Consultancy Limited to be the Bid Process Coordinator (BPC) for the purpose of selection of Bidder as Transmission Service Provider (TSP) to develop Intra-State Transmission Project i.e. "**Establishment of 400/220/132 kV AIS Sakoli (Dist. Bhandara)"** to be implemented through tariff based competitive bidding process.

2. REC Power Development and Consultancy Limited (hereinafter referred to as BPC) hereby invites all prospective Bidders for issue of Request for Proposal (RFP) for selection of Bidder as Transmission Service Provider (TSP) on the basis of international competitive bidding in accordance with the "Tariff Based Competitive Bidding Guidelines for Transmission Service" and "Guidelines for Encouraging Competition in Development of Transmission Projects" issued by Government of India, Ministry of Power under section – 63 of The Electricity Act, 2003 and as amended from time to time. The responsibility of the TSP would be to develop the following Intra-State Transmission Project i.e. "**Establishment of 400/220/132 kV AIS Sakoli (Dist. Bhandara)**" (hereinafter referred to as 'Project') on build, own, operate & transfer basis and to provide transmission service:

Establishment of 400/220/132 kV AIS Sakoli (Dist. Bhandara)		
Sl. No.	**Scope of the Transmission Scheme**	**Scheduled COD in months from Effective Date**
1.	Establishment of AIS Sakoli with 2 x 500 MVA, 400/220 kV ICTs & 2 x 315 MVA, 400/132 kV ICTs with 1 x 125 MVAr Bus Reactor at 400 kV level. • 400 / 220 kV, 500 MVA, ICTs – 02 Nos. • 400 / 132 kV, 315 MVA, ICTs – 02 Nos. • 400 kV ICT Bays – 04 Nos. • 220 kV ICT Bays – 02 Nos. • 132 kV ICT Bays – 02 Nos. • 400 kV Line Bays – 04 Nos. • 220 kV Line Bays – 02 Nos. • 132 kV Line Bays – 06 Nos. • 220 kV Transfer Bus Coupler- 1 set • 220 kV Bus Coupler-1 No. • 132 kV Bus Coupler-1 No. • 132 kV Transfer Bus Coupler- 1 set **<u>Future Space Provisions:</u>**	24 months from the effective date

Establishment of 400/220/132 kV AIS Sakoli (Dist. Bhandara)		
Sl. No.	**Scope of the Transmission Scheme**	**Scheduled COD in months from Effective Date**
	• 400/132 kV, 315 MVA, ICT-01 No. • 400 kV ICT Bay-1 No. • 132 kV ICT Bay-1 No.	
2.	LILO of Both circuit of 400 kV Wardha (PG)- Raipur (PG) 400 kV D/C line at 400 kV AIS Sakoli (New)	
3.	220 kV D/C line from 400 kV AIS Sakoli (New) to 220 kV Bhandara (existing) • 220 kV line end bays at 220 kV Bhandara (existing)-02 Nos.	
4.	132 kV D/C line from 400 kV AIS Sakoli (New) to 132 kV Deori (proposed) • 132 kV line end bays at 132 kV Deori (proposed)-02 Nos.	
5.	132 kV D/C line from 400 kV AIS Sakoli (New) to 132 kV Sakoli (existing) • 132 kV line end bays at 132 kV Sakoli (existing)-02 Nos.	
6.	132 kV D/C line from 400 kV AIS Sakoli (New) to132 kV Morgaon Arjuni (existing) • 132 kV line end bays at 132 kV Morgaon Arjuni (existing) -02 Nos.	
Note- *Space for 220 kV line bay at Bhandara (Existing), 132 kV line end bays at 132 kV Deori, 132 kV line end bays at 132 kV Moregaon Arjuni (Existing) and 132 kV line end bays at 132 kV Sakoli (Existing) shall be provided by existing Utility. However in case of land constraints TSP may opt for GIS bays or acquire suitable land adjacent to the substations.* *In case of LILO lines the technical specifications of Conductor and OPGW should be matching with existing line parameters.*		

3. The TSP shall ensure that design, construction and testing of all equipment, facilities, components and systems of the Project shall be in accordance with the provisions of the Transmission Service Agreement and applicable Rules/ Regulations, Orders, Codes and Guidelines issued by the State Government and State Commission and other relevant Orders, Rules/ Regulations of Central Government and Central Commission, as applicable.

4. **Transmission License**: The TSP shall obtain the Transmission License from the State Commission.

5. **Bidding Process:** The Transmission Service Provider shall be selected through tariff based competitive bidding process for the Project based on meeting stipulated Qualification Requirements prescribed in Clause 2.1 of Section 2 of RFP and the lowest Quoted Transmission Charges discovered from Final Offers quoted during the e-reverse bidding. The selection of the TSP shall be subject to it obtaining Transmission License from the State Commission, which, after expiry, may be further extended by such period as deemed appropriate by the State Commission under powers vested with it to amend the conditions of the Transmission License.

   The entire bidding process shall be conducted on electronic platform created by MSTC Limited.

   The Bid shall be a single stage two envelope bid comprising the Technical Bid and the Financial Bid. The Bidders shall submit the Bid online through the electronic bidding platform. In addition to the online submission, the Bidder with lowest Final Offer will be required to submit original hard copies of Annexure 3, Annexure 4 (if applicable), Annexure 6 (if applicable) and Annexure 14 before issuance of LoI. There shall be no physical submission of the Financial Bid.

   The Technical Bid shall be opened first and the Financial Bid of only the bidders who have qualified in the Technical Bid shall be opened. The Financial Bid will comprise of two rounds. In the first round the Initial Offer of the responsive bids would be opened and Quoted Transmission Charges of Initial Offer shall be ranked on the basis of ascending order. The Bidders, in the first fifty per cent of the ranking (with any fraction rounded off to higher integer) or four Bidders, whichever is higher, shall qualify for participating in the electronic reverse auction stage and submit their Final Offer.

6. The objective of the bidding process is to select a Successful Bidder pursuant to this RFP, who shall acquire one hundred percent (100%) of the equity shares of Sakoli Power Transmission Limited along with all its related assets and liabilities as per the provisions of the Share Purchase Agreement, at the Acquisition Price to be intimated by the BPC, twenty (20) days prior to the Bid Deadline.

   The Sakoli Power Transmission Limited, of which one hundred percent (100%) equity shares will be acquired by the Selected Bidder, shall be responsible as the TSP, for ensuring that it undertakes ownership, financing, development, design, engineering, procurement, construction, commissioning, operation and maintenance of the Project, and to provide Transmission Service as per the terms of the RFP Project Documents.

   The TSP shall ensure transfer of all project assets with substation land, right of way and clearances to Maharashtra STU or its successors or an agency as decided by the Government of Maharashtra after 35 years from COD of Project at zero cost and free from any encumbrance and liability. The transfer shall be completed within 90 days after 35 years from COD of Project failing which Government of Maharashtra shall be entitled to take over the project assets Suo moto.

7. **Commencement of Transmission Service**: The Bidder shall have to commence Transmission Service in accordance with the provisions of the Transmission Service Agreement.

8. **Transmission Charges**: The Transmission Charges shall be payable by the Long Term Transmission System Users in Indian Rupees through the Nodal Agency as per Maharashtra Electricity Regulatory Commission (Sharing of Intra-State Transmission Charges and Losses) Regulations as amended from time to time. Bidders shall quote the Transmission Charges as per the pre-specified structure, as mentioned in the RFP.

9. **Issue of RFP document:** The detailed terms and conditions for qualification and selection of the Transmission Service Provider for the Project and for submission of Bid are indicated in the RFP document. All those interested in purchasing the RFP document may respond in writing to Chief Executive Officer, vijay.kulkarni@recpdcl.in & tbcb@recpdcl.in at the address given in para 12 below with a non-refundable fee of Rs. 5,00,000/- (Rupees Five Lakh Only) or US$ 7,000 (US Dollars Seven Thousand Only) plus GST @18%, to be paid latest by 16.02.2026 via electronic transfer to the following Bank Account:

Bank Name, Address & Branch	ICICI Bank 9A, Phelps Building, Inner Circle, Connaught Place, New Delhi110001
Bank Account Name	REC Power Development & Consultancy Limited
Bank Account No	000705041275
Bank IFSC Code No	ICIC0000007

Immediately after issuance of RFP document, the Bidder shall submit the Pre-Award Integrity Pact in the format as prescribed in Annexure B, which shall be applicable for and during the bidding process, duly signed on each page by any whole-time Director / Authorized Signatory, duly witnessed by two persons, and shall be submitted by the Bidder in two (2) originals in a separate envelope, duly superscripted with Pre-Award Integrity Pact. The Bidder shall submit the Pre-Award Integrity Pact on non-judicial stamp paper of Rs. 100/- each duly purchased from the National Capital Territory of Delhi. In case the Bidder is in a consortium, the Pre-Award Integrity Pact shall be signed and submitted by each member of the Consortium separately.

The RFP document shall be issued to the Bidders on any working day from 16.12.2025 to 16.02.2026 between 1030 hours (IST) to 1600 hours (IST). The BPC, on written request and against payment of the above mentioned fee by any Bidder shall promptly dispatch the RFP document to such Bidder by registered mail/ air mail. BPC shall, under no circumstances, be held responsible for late delivery or loss of documents so mailed.

10. **Receipt and opening of Bid:** The Bid must be uploaded online through the electronic bidding platform on or before 1500 hours (IST) on 17.02.2026. Technical Bid will be opened by the Bid Opening Committee on the same day at 1530 hours (IST) in the office of Chief Engineer (Maharashtra STU), Mumbai, in the online presence of Bidders' representatives who wish to attend. If the Bid Deadline is a public holiday at the place of submission of Bid, it shall be opened on the next working day at the same time and venue. In addition to the online submission, the Bidder with lowest Final Offer will be required to submit original hard copies of Annexure 3, Annexure 4 (if applicable), Annexure 6 (if applicable) and Annexure 14 before issuance of LoI. Bidders meeting the Qualification Requirements, subject to evaluation as specified in Clause **3.2** to **3.4** shall be declared as "Qualified Bidders" and eligible for opening of Initial Offer.

11. The RFP document is not transferable. BPC reserves the right to reject all Bid and/or annul the process of tariff based competitive bidding for selection of Bidder as TSP to execute the

Project without assigning any reason. BPC shall not bear any liability, whatsoever, in this regard.

12. **Nodal person for enquiries and clarifications**

All correspondence and clarification in respect of RFP document shall be addressed to:

Chief Executive Officer,
REC Power Development and Consultancy Limited
(A wholly owned subsidiary of REC Limited)
REC Corporate Head Quarter,
D Block, Plot No. I – 4,
Sec – 29 Gurugram – 122 001
Email: vijay.kulkarni@recpdcl.in & tbcb@recpdcl.in

DISCLAIMER

1. This Request for Proposal (RFP) document is not an agreement or offer by the BPC to the prospective Bidders or to any other party. The purpose of this RFP document is to provide interested parties with information to assist the formulation of their Bid. The RFP document is based on material and information available in public domain.

2. This RFP, along with its Annexures, is not transferable and the information contained therein are to be used only by the person to whom it is issued. It may not be copied or distributed by the recipient to third parties (other than in confidence to the recipient's professional advisors). In the event that the recipient does not continue with its involvement in the Project in accordance with this RFP, this RFP must be kept confidential.

3. While this RFP has been prepared in good faith, neither the BPC nor its employees or advisors/consultants make any representation or warranty expressed or implied as to the accuracy, reliability or completeness of the information contained in this RFP. The Bidders shall satisfy themselves, on receipt of the RFP document, that the RFP document is complete in all respects. Intimation of any discrepancy shall be given to this office immediately. If no intimation is received from any Bidder within ten (10) days from the date of issue of this RFP document on or before the date & time mentioned in this RFP, it shall be considered that the issued document, complete in all respects, has been received by the Bidders.

   This bidding process is in accordance with the Bidding Guidelines issued by Ministry of Power, Government of India under Section 63 of the Electricity Act, 2003. Revisions or amendments in these Bidding Guidelines may cause the BPC to modify, amend or supplement this RFP document, including the RFP Project Documents to be in conformance with the Bidding Guidelines.

4. This RFP document includes statements, which reflect various assumptions arrived at by BPC in order to give a reflection of current status in the RFP. These assumptions should not be entirely relied upon by Bidders in making their own assessments. This RFP document does not purport to contain all the information each Bidder may require and may not be appropriate for all persons. It is not possible for BPC to consider the investment objectives, financial situation and particular needs of each party who reads or uses this RFP document. Certain Bidders may have a better knowledge of the Project than the others. Each Bidder should conduct its own investigations and analysis and should check the accuracy, reliability and completeness of the information in this RFP document and obtain independent advice from appropriate sources.

5. Neither BPC nor their employees or consultants make any representation or warranty as to the accuracy, reliability or completeness of the information in this RFP document.

6. Neither BPC, its employees nor its consultants will have any liability to any Bidder or any other person under the law of contract, tort, the principles of restitution or unjust enrichment or otherwise for any loss, expense or damage which may arise from or be incurred or suffered in connection with anything contained in this RFP document, any matter deemed to form part of this RFP document, the award of the Project, the information supplied by or on behalf of BPC or its employees, any consultants or otherwise arising in any way from the qualification process for the said Project.

7. By participating in the bidding process, each of the Bidder shall have acknowledged and accepted that it has not been induced to enter into such agreement by any representation or warranty, expressed or implied, or relied upon any such representation or warranty by or on behalf of BPC or any person working in the bidding process.

8. BPC may in its absolute discretion, but without being under any obligation to do so, update, amend or supplement this RFP document. Such updations, amendments or supplements, if any, will however be circulated to the Bidders not later than 15 days prior to the last date for submission of Bid.

9. Each Bidder unconditionally agrees, understands and accepts that the BPC reserves the rights to accept or reject any or all Bids without giving any reason. Neither the BPC nor its advisers shall entertain any claim of any nature, whatsoever, including without limitations, any claim seeking expenses in relation to the preparation of Bids.

10. This RFP may be withdrawn or cancelled by the BPC at any time without assigning any reasons thereof. BPC further reserves the right, at its complete discretion to reject any or all of the Bids without assigning any reasons whatsoever.

INDEX

SECTION	CONTENTS	PAGE NO.
	DEFINITIONS	12
1.	INTRODUCTION	18
2.	INFORMATION AND INSTRUCTIONS FOR BIDDERS	25
3.	EVALUATION OF THE TECHNICAL AND FINANCIAL BID	53
4.	ANNEXURES FOR BID	59
	ANNEXURES	
1	Format for the Covering Letter	61
2	Format for Letter of Consent from Consortium Members	65
3	Format for evidence of authorized signatory's authority (Power of Attorney)	67
4	Format for Power of Attorney to be provided by each of the other members of the Consortium in favor of the Lead Member	69
5	Format for Bidder's composition and ownership structure and Format for Authorization	71
6	Format for Consortium Agreement	74
7A	Format for Qualification Requirement – Net worth	78
7B	Format for Technical Requirement	81
7C	Format for Technical and Financial Requirement – Relationship & Equity Shareholding	85
7D	Format for Additional Information for verification of Financial and Technical Capabilities of Bidders	87
8	Format for Undertaking and Details of Equity Investment	90
9	Format for Authorization from Parent / Affiliate of Bidding Company / Member of Bidding Consortium whose technical / financial capability has been used by the Bidding Company / Member of Bidding Consortium.	96
10	Format for Undertaking by Technically/Financially Evaluated Entity/Ultimate Parent Company	98
11	Format for Board Resolution	100
11A	Illustration for Applicable Board Resolution Requirements under Clause 2.5.2	103
12	Format for illustration of Affiliates	105
13	Format for disclosure	106

SECTION	CONTENTS	PAGE NO.
14	Format For Bid Bond	107
14A	Format of the Surety Bond for Bid Security	109
14B	Format of Payment on Order Instrument to be issued by IREDA/REC/PFC	111
15	Format for Contract Performance Guarantee	114
15A	Format For Surety Insurance Contract	116
15B	Format for Issuance of Payment on Order Instrument	120
16	Format for Checklist for Technical Bid Submission Requirements	124
17	List of Banks	127
18	Grid Map of the Project	128
19	Format for Clarifications / Amendments on the RFP / RFP Project Documents	129
20	Formats For RFP Project Documents	130
21	Format For Financial Bid	131
22	Format of Affidavit	132
	Annexure A	134
	Annexure-B	135
	Annexure-C	142

DEFINITIONS

Any capitalized term, used but not defined in this RFP, shall have the meaning ascribed to such term in the RFP Project Documents, or the Bidding Guidelines, in that order. In absence of availability of definitions in the foregoing references, the capitalized terms shall be interpreted in accordance with the Electricity Act 2003, Grid Code or any other relevant electricity law, rule or regulation prevalent in India, as amended or re-enacted from time to time, in that order.

The following terms are defined for use in this RFP:

"Acquisition Price" shall have the same meaning as defined in the Share Purchase Agreement;

"Affiliate" shall mean a company that either directly or indirectly

i. controls or
ii. is controlled by or
iii. is under common control with

a Bidding Company (in the case of a single company) or a Member (in the case of a Consortium) and "**control**" means ownership by one entity of at least twenty six percent (26%) of the voting rights of the entity. As an illustration a chart is annexed hereto as Annexure – 12;

"Bid" shall mean Technical Bid and Financial Bid (Initial Offer and Final Offer) submitted by the Bidder, in response to this RFP, in accordance with the terms and conditions thereof;

"Bidder" shall mean either a single company (including its permitted successors and legal assigns) or a Consortium of companies (including its permitted successors and legal assigns) submitting a Bid in response to this RFP. Any reference to the Bidder includes Bidding Company, Bidding Consortium/ Consortium, Member in a Bidding Consortium and Lead Member of the Bidding Consortium jointly and severally, as the context may require;

"Bidding Company" shall refer to such single company (including its permitted successors and legal assigns) that has submitted a Bid for the Project;

"Bidding Consortium/ Consortium" shall refer to a group of companies (including their permitted successors and legal assigns) that has collectively submitted a Bid for the Project;

"Bidding Guidelines" shall mean the "Tariff Based Competitive-Bidding Guidelines for Transmission Service" and "Guidelines for Encouraging Competition in Development of Transmission Projects" issued by Government of India, Ministry of Power under Section – 63 of Electricity Act as amended from time to time;

"Bid Bond" shall mean the unconditional and irrevocable bank guarantee or unconditional and irrevocable Insurance Surety Bond issued by Insurance Company authorized by Insurance Regulatory and Development Authority of India) or Payment on Order Instrument for Rupees Six Crore and Sixty-Eight Lakh (Rs. 6.68 Crore) only, to be submitted along with the Technical Bid by the Bidder under Clause 2.11 of this RFP, as per the format prescribed in Annexure 14 (for Bank Guarantee) or Annexure 14A (for Insurance Surety Bond) or Annexure 14B (for Payment on Order);

"Bid Deadline" shall mean the last date and time for submission of online Bid in response to this RFP, specified in Clause 2.7.1;

"Bid Process Coordinator or BPC" shall mean a person or its authorized representative as notified by the Government of Maharashtra, responsible for carrying out the process for selection of Bidder who will acquire Transmission Service Provider;

"CEA" shall mean the Central Electricity Authority constituted under Section - 70 of the Electricity Act;

"Central Commission" or "CERC" shall mean the Central Electricity Regulatory Commission of India constituted under Section-76 of The Electricity Act, 2003 and any successors and assigns;

"Central Government" shall mean the Government of India;

"Conflict of Interest" A Bidder shall be considered to be in a Conflict of Interest with one or more Bidders in the same bidding process if they have a relationship with each other, directly or through a common company, that puts them in a position to have access to information about or influence the Bid of another Bidder.

Provided that if two or more bidders in the bidding process have formed a Joint Venture Company or Consortium to execute another project, the Bidders will not be considered to have Conflict of Interest;

"Commercial Operation Date (COD)" shall mean the date as per Article 6.2 of the Transmission Service Agreement;

"Consents, Clearances, Permits" shall mean all authorizations, licenses, approvals, registrations, permits, waivers, privileges, acknowledgements, agreements, or concessions required to be obtained from or provided by any concerned authority for the development, execution and performance of Project including without any limitation on the construction, ownership, operation and maintenance of the transmission lines and/or sub-stations;

"Contract Performance Guarantee" shall have the meaning as per Clause 2.12 of this RFP;

"Contract Year" shall mean the period beginning on the Scheduled COD, and ending on the immediately succeeding March 31 and thereafter each period of 12 months beginning on April 1 and ending on March 31 provided that:

(i) the last Contract Year shall end on the last day of the term of the Transmission Service Agreement;

"CTU/Central Transmission Utility" shall have same meaning as defined in the Electricity Act, 2003;

"Infrastructure sector" shall mean such sectors notified by Department of Economic Affairs in its Gazette Notification no. 13/1/2017-INF dated 14th November, 2017 and as amended from time to time;

"Effective Date" shall have the meaning as ascribed thereto in the Transmission Service Agreement;

"Element" shall mean-each Transmission Line or each circuit of the Transmission Lines (where there are more than one circuit) or each bay of the Sub-station or switching station or HVDC terminal or inverter station of the Project, including ICTs, Reactors, SVC, FSC, etc. forming part of the Intra-State Transmission System which will be owned, operated and maintained by the concerned Licensee, and which may have a separate scheduled COD as per Schedule 2 of the Transmission Service Agreement and may have a separate percentage for recovery of Transmission Charges on achieving COD as per Schedule 5 of the Transmission Service Agreement;

"Empowered Committee" shall mean the committee constituted by the Government of Maharashtra in terms of the "Guidelines for Encouraging Competition in Development of Transmission Projects", as notified from time to time;

"Final Offer" shall mean the Quoted Transmission Charges, required to be submitted as part of the Financial Bid on the electronic bidding platform during the e-reverse bidding stage. In case, no Final Offer is received during the e-reverse bidding stage then the lowest "Initial Offer" shall be deemed to be the Final Offer**;**

"Financial Bid" shall mean the Initial Offer and Final Offer, containing the Bidder's Quoted Transmission Charges, as per the format at Annexure – 21 of this RFP**;**

"Financially Evaluated Entity" shall mean the company which has been evaluated for the satisfaction of the financial requirement set forth in Clause **2.1.3** hereof;

"Grid Code" / "IEGC" or **"State Grid Code"** shall mean the Grid Code specified by the Central Commission under clause (h) of sub-section (1) of Section 79 of the Electricity Act and/or the State Grid Code as specified by the concerned State Commission referred under clause (h) of sub-section (1) of Section 86 of the Electricity Act as applicable;

"Initial Offer" shall mean the Quoted Transmission Charges, required to be submitted as part of the Financial Bid on the electronic bidding platform along with the Technical Bid**;**

"Inter State Generating Station" or "ISGS" shall mean a Central / other generating station in which two or more states have shares and whose scheduling is to be coordinated by the Regional Load Despatch Centre;

"Inter-State Transmission System" shall have same meaning as defined in the Electricity Act, 2003;

"Intra-State Transmission System" shall have same meaning as defined in the Electricity Act, 2003;

"Lead Member of the Bidding Consortium" or "Lead Member" shall mean a company who commits at least twenty six percent (26%) equity stake in the Project, meets the technical requirement as per Clause 2.1.2 and so designated by other Member(s) in Bidding Consortium;

"Letter of Intent" or "LoI" shall mean the letter to be issued by the BPC to the Bidder, who has been identified as the selected bidder, for award of the Project to such Bidder;

"Long Term Transmission System User" or "LTTSU" shall have the meaning as described in Maharashtra Electricity Regulatory Commission (Transmission Open Access) Regulations, 2016 as amended from time to time.

"Member in a Bidding Consortium/Member" shall mean each company in the Bidding Consortium;

"MOP" shall mean the Ministry of Power, Government of India;

"MOEF" shall mean the Ministry of Environment, Forest and Climate Change, Government of India;

"Nodal Agency" shall mean Maharashtra State Transmission Utility (STU), which shall execute and implement the Transmission Service Agreement (TSA);

"Technical Bid" shall mean the bid submitted online through the electronic bidding platform, containing the documents as listed out in Clause 2.5.2 of this RFP;

"Parent Company" shall mean an entity that holds at least twenty six percent (26%) of the paid - up equity capital directly or indirectly in the Bidding Company or in the Member in a Bidding Consortium, as the case may be;

"Qualification Requirements" shall mean the qualification requirements as set forth in Section-2, Clause 2.1 of this RFP;

"Quoted Transmission Charges" shall mean the quoted single annual Transmission Charges submitted online through the electronic bidding platform by the Bidder as part of its Financial Bid as per the format in Annexure – 21 of this RFP;

"RFP" shall mean Request for Proposal document along with all schedules, formats, annexure and RFP Project Documents attached hereto, issued by BPC for tariff based competitive bidding process for selection of bidder who will acquire the TSP through e-reverse bidding to execute the Project, and shall include any modifications, amendments or alterations or clarifications thereto;

"RFP Project Documents" shall mean the following documents to be entered into in respect of the Project, by the parties to the respective agreements:

a. Transmission Service Agreement (TSA),
b. Share Purchase Agreement,
c. Any other agreement, as may be required;

"Payment on Order Instrument" shall mean Letter of Undertaking from Indian Renewable Energy Development Agency Limited (IREDA) or Power Finance Corporation Limited (PFC) or REC Limited (REC) [the three non-banking financial institutions under Ministry of New & Renewable Energy (MNRE)/ Ministry of Power (MoP)], to pay in case situation of default of Transmission Service Provider (TSP) in terms of tender conditions/ Power Purchase Agreement (PPA) arises. Such Letter(s) will have same effect as that of a Bank Guarantee issued by any public sector bank. Such "Payment on Order instrument" would have terms and conditions similar to that of any Bank Guarantee given by any public sector bank and would promise to pay the Nodal Agency on demand within stipulated time. TSPs can seek such Letter(s) by offering due

security to the above-mentioned three non-banking financial institutions mentioned above (IREDA, PFC & REC). Nodal Agency shall not accept the instrument of 'Letter of Undertaking' as described above or in any other form, from any other non-banking financial institutions or bank, except IREDA, PFC & REC.

"Scheduled COD" shall have the meaning as ascribed hereto in Clause 2.6 of this RFP;

"State Commission" or "MERC" shall mean the Maharashtra Electricity Regulatory Commission constituted under Section-82 of The Electricity Act, 2003 and any successors and assigns;

"State Government" shall mean the Government of Maharashtra;

"Statutory Auditor" shall mean the auditor appointed under the provisions of the Companies Act, 1956 / Companies Act, 2013 (as the case may be) or under the provisions of any other applicable governing law;

"STU" or **"State Transmission Utility"** shall have same meaning as defined in the Electricity Act, 2003;

"Share Purchase Agreement" shall mean the agreement amongst REC Power Development and Consultancy Limited, Sakoli Power Transmission Limited and the Successful Bidder for the purchase of one hundred (100%) per cent of the shareholding of the Sakoli Power Transmission Limited for the Acquisition Price, by the Successful Bidder on the terms and conditions as contained therein;

"Successful Bidder" or **"Selected Bidder"** shall mean the Bidder selected pursuant to this RFP to acquire one hundred percent (100%) equity shares of Sakoli Power Transmission Limited , along with all its related assets and liabilities, which will be responsible as the TSP to establish the Project on build, own, operate and transfer basis as per the terms of the Transmission Service Agreement and other RFP Project Documents;

"Survey Report" shall mean the report containing initial information regarding the Project and other details provided as per the provisions of Clause 1.6.2.1.1 of this RFP;

"Technically Evaluated Entity" shall mean the company which has been evaluated for the satisfaction of the technical requirement set forth in Clause 2.1.2 hereof;

"Transmission Charges" shall mean the Final Offer quoted by Selected Bidder and adopted by the State Commission, payable to the TSP as per MERC MYT Regulations;

"Transmission License" shall mean the license granted by the State Commission in terms of the relevant regulations for grant of such license issued under the Electricity Act, 2003;

"Transmission Service Agreement" or **"TSA"** shall mean the agreement entered into between Nodal Agency and the TSP, pursuant to which the TSP shall build, own, operate and transfer the Project and make available the assets of the Project on a commercial basis;

"Transmission Service Provider" or "TSP" shall mean Sakoli Power Transmission Limited which has executed the Transmission Service Agreement and which shall be acquired by the

Selected Bidder;

"Ultimate Parent Company" shall mean an entity which owns at least twenty six percent (26%) equity in the Bidding Company or Member of a Consortium, (as the case may be) and in the Technically Evaluated Entity and/or Financially Evaluated Entity (as the case may be) and such Bidding Company or Member of a Consortium, (as the case may be) and the Technically Evaluated Entity and/or Financially Evaluated Entity (as the case may be) shall be under the direct control or indirectly under the common control of such entity.

SECTION – 1

INTRODUCTION

SECTION 1

1. INTRODUCTION

1.1 The Government of Maharashtra vide its Gazette Notification No. Sankirna-0125/P.R.32/Urja-4 dated 09.04.2025 has notified REC Power Development and Consultancy Limited to be the Bid Process Coordinator (BPC) for the purpose of selection of Bidder as Transmission Service Provider (TSP) to develop Intra-State Transmission Project i.e. **"Establishment of 400/220/132 kV AIS Sakoli (Dist. Bhandara)"** to be implemented through tariff based competitive bidding process.

The BPC hereby invites Bids from all prospective Bidders in accordance with this Request for Proposal (RFP) to select prospective Transmission Service Provider (TSP) in accordance with the "Tariff Based Competitive-Bidding Guidelines for Transmission Service" and "Guidelines for Encouraging Competition in Development of Transmission Projects" issued by Government of India, Ministry of Power under Section – 63 of the Electricity Act. The BPC shall select the Bidder having the prescribed technical and financial capability to become TSP and be responsible for establishing the Project in the state of Maharashtra. The TSP will make the Project available against payment of Transmission Charges, as adopted by the State Commission, payable to the TSP, as per provisions of Transmission Service Agreement.

1.2 The TSP will be required to establish the following Intra State Transmission Project i.e. "**Establishment of 400/220/132 kV AIS Sakoli (Dist. Bhandara)"** (hereinafter referred to as 'Project') on build, own, operate and transfer basis, and to provide transmission service.

1.3

Establishment of 400/220/132 kV AIS Sakoli (Dist. Bhandara)		
Sl. No.	**Scope of the Transmission Scheme**	**Scheduled COD in months from Effective Date**
1.	Establishment of AIS Sakoli with 2 x 500 MVA, 400/220 kV ICTs & 2 x 315 MVA, 400/132 kV ICTs with 1 x 125 MVAr Bus Reactor at 400 kV level. • 400 / 220 kV, 500 MVA, ICTs – 02 Nos. • 400 / 132 kV, 315 MVA, ICTs – 02 Nos. • 400 kV ICT Bays – 04 Nos. • 220 kV ICT Bays – 02 Nos. • 132 kV ICT Bays – 02 Nos. • 400 kV Line Bays – 04 Nos. • 220 kV Line Bays – 02 Nos. • 132 kV Line Bays – 06 Nos. • 220 kV Transfer Bus Coupler- 1 set • 220 kV Bus Coupler-1 No. • 132 kV Bus Coupler-1 No.	24 months from the effective date

Establishment of 400/220/132 kV AIS Sakoli (Dist. Bhandara)		
Sl. No.	**Scope of the Transmission Scheme**	**Scheduled COD in months from Effective Date**
	• 132 kV Transfer Bus Coupler- 1 set **<u>Future Space Provisions:</u>** • 400/132 kV, 315 MVA, ICT-01 No. • 400 kV ICT Bay-1 No. • 132 kV ICT Bay-1 No.	
2.	LILO of Both circuit of 400 kV Wardha (PG)- Raipur (PG) 400 kV D/C line at 400 kV AIS Sakoli (New)	
3.	220 kV D/C line from 400 kV AIS Sakoli (New) to 220 kV Bhandara (existing) • 220 kV line end bays at 220 kV Bhandara (existing)-02 Nos.	
4.	132 kV D/C line from 400 kV AIS Sakoli (New) to 132 kV Deori (proposed) • 132 kV line end bays at 132 kV Deori (proposed)-02 Nos.	
5.	132 kV D/C line from 400 kV AIS Sakoli (New) to 132 kV Sakoli (existing) • 132 kV line end bays at 132 kV Sakoli (existing)-02 Nos.	
6.	132 kV D/C line from 400 kV AIS Sakoli (New) to132 kV Morgaon Arjuni (existing) • 132 kV line end bays at 132 kV Morgaon Arjuni (existing) -02 Nos.	

Note-
Space for 220 kV line bay at Bhandara (Existing), 132 kV line end bays at 132 kV Deori, 132 kV line end bays at 132 kV Moregaon Arjuni (Existing) and 132 kV line end bays at 132 kV Sakoli (Existing) shall be provided by existing Utility. However in case of land constraints TSP may opt for GIS bays or acquire suitable land adjacent to the substations.

In case of LILO lines the technical specifications of Conductor and OPGW should be matching with existing line parameters.

1.4 Project Description

Existing transmission network in Bhandara and Gondia districts majorly comprise of 10 no. of radially fed 132 kV MSETCL Sub-stations with fag-end Sub-station at around 150 km transmission line length.

The scheme is proposed to enhance the transmission capacity of Eastern Vidarbha by connecting ISTS network with existing InSTS network and in turn providing reliable and strong source of supply transmission network in Bhandara and Gondia districts. This will in turn reduce the transmission constraints in region.

The subject Transmission system was deliberated and approved in the 7th meeting of the Empowered Committee held on 12.03.2025. Govt. of Maharashtra vide Gazette notification dated 09.04.2025 has appointed RECPDCL as BPC for implementation of the subject transmission scheme through TBCB route.

1.5 Transmission Grid Map

Transmission Grid Map indicating the location of the Project is enclosed as Annexure 18 of this RFP for information and reference of the Bidders**.**

1.6 The objective of the bidding process is to select a Successful Bidder pursuant to this RFP, who shall acquire one hundred percent (100%) of the equity shares of Sakoli Power Transmission Limited along with all its related assets and liabilities as per the provisions of the Share Purchase Agreement, at the Acquisition Price to be intimated by the BPC, twenty (20) days prior to the Bid Deadline.

The Sakoli Power Transmission Limited, of which one hundred percent (100%) equity shares will be acquired by the Selected Bidder, shall be responsible as the TSP, for ensuring that it undertakes ownership, financing, development, design, engineering, procurement, construction, commissioning, operation and maintenance of the Project, and to provide Transmission Service as per the terms of the RFP Project Documents.

The TSP shall ensure transfer of all project assets along with substation land, right of way and clearances to Maharashtra STU or its successors or an agency as decided by the Government of Maharashtra after 35 years from COD of project at zero cost and free from any encumbrance and liability. The transfer shall be completed within 90 days after 35 years from COD of project failing which Government of Maharashtra shall be entitled to take over the project assets Suo moto.

1.7 **Brief Scope of Work**

1.6.1 **Scope of Transmission Service Provider**

The TSP's scope of work for the Project shall comprise, but not necessarily be limited to the following:

1.6.1.1 Establishment, operation and maintenance of the Project on build, own, operate and

transfer basis and completion of all the activities for the Project, including survey, detailed project report formulation, arranging finance, project management, necessary Consents, Clearances and Permits (way leave, environment & forest, civil aviation, railway/ road/river/canal/power crossing/PTCC, etc.), land compensation, design, engineering, equipment, material, construction, erection, testing & commissioning.
Further, the actual location of Greenfield substations (Switching Stations or HVDC Terminal or Inverter Stations) in the scope of TSP:

- For a Generation Pooling Substation shall not be beyond 3 Km radius of the location proposed by the BPC in their Survey Report.
- For Load Serving Substation within the scope of TSP shall not be beyond 5 Km radius of the location proposed by the BPC in their Survey Report.
- For an Intermediate Substation shall not be beyond 10 Km radius of the location proposed by the BPC in their Survey Report.

1.6.1.2 The TSP shall ensure that design, construction and testing of all equipment, facilities, components and systems of the Project shall be in accordance with Transmission Service Agreement and applicable Rules/ Regulations, Orders, Codes and Guidelines issued by State Government and State Commission and other relevant Orders, Rules/ Regulations of Central Government and Central Commission, as applicable.

1.6.1.3 The TSP shall ensure timely completion of entire scope of Project in all respects and its operation and maintenance, as shall be specified in the RFP documents.

1.6.1.4 The TSP shall seek Transmission License from the State Commission, as per the provisions of the Electricity Act and regulations made thereunder.

1.6.1.5 The TSP shall seek approval under Section 164 of Electricity Act, from Government of Maharashtra after acquisition of Sakoli Power Transmission Limited. The approval shall be granted by Government of Maharashtra upon receipt of application (complete in all aspects).

1.6.1.6 Regarding construction of bays, requirement of internal road, drainage, cable trench, leveling of the bay extension area, Bidder is advised to visit the site and acquaint itself with the provisions/facilities available at substation and the quantum of necessary modification work involved for accommodating the necessary bays in existing substations. These works shall be in the scope of the TSP.

1.6.2 Scope of Bid Process Coordinator (BPC)

BPC's scope of work is briefly outlined herein under:

1.6.2.1 The BPC has initiated development of the Project and shall be responsible for the tasks in this regard as specified hereunder:

1. Provide to the Bidders a Survey Report for the Project at least forty five (45) days prior to the Bid Deadline. The Survey Report shall include the suggested route with approximate route length, type of terrain likely to be encountered and its likely implication in terms of Right of Way (ROW), statutory clearances, location of substations or converter stations and land area to be acquired for the substation or converter station.

2. To obtain approval for laying of overhead transmission lines under Section 68 of Electricity Act, from the State Government at least twenty (20) days prior to Bid Deadline.

3. To initiate acquisition of land for location specific substations, switching stations or HVDC terminal or inverter stations, if required.

4. To initiate process of seeking forest clearance, if required

5. The BPC shall intimate to the Bidders, the Acquisition Price payable by the Selected Bidder to the REC Power Development and Consultancy Limited for the acquisition of one hundred percent (100%) of the equity shareholding of Sakoli Power Transmission Limited, along with all its related assets and liabilities at least twenty (20) days prior to the Bid Deadline.

6. The BPC shall ensure issuance of all finalized RFP Project Documents, at least fifteen (15) days prior to the Bid Deadline.

   Provided that for any delay in meeting the above obligations of the BPC within the specified time period above, the Bid Deadline as per Clause 2.7.1 shall be extended on a day for day basis.

1.6.2.2 The details and documents as may be obtained by the BPC/ project specific SPV in relation to the Project shall be handed over to the TSP on an as-is-where-is basis, so that it may take further actions to obtain Consents, Clearances and Permits.

1.7 All costs (including direct and indirect) incurred by the BPC/ project specific SPV in connection with the activities concerning the Project shall be recovered from the TSP, which shall be included in the Acquisition Price.

1.8 The Project is required to be completed progressively in accordance with the schedule prescribed in this RFP.

1.9 A company under the Companies Act, 2013 by the name Sakoli Power Transmission Limited has been incorporated to initiate the activities for execution of the Project. The said company shall be acquired by the successful Bidder as per terms and conditions as may be prescribed in RFP.

1.10 The Ministry of Power and the appropriate state government(s) shall provide their support to the TSP, on best endeavor basis, in enabling the TSP to develop the Project.

1.11 All Bidders are required to submit their Bid in accordance with the instructions set forth in this RFP.

1.12 Once the Successful Bidder is selected, the details and documents as may be obtained by the BPC/ project specific SPV in relation to the Project, shall be handed over to the Successful Bidder on as is where basis, so that it may take further actions to obtain all necessary Consents, Clearances and Permits and the TSP shall not be entitled for any extensions in the Scheduled COD of the Project except as provided for in the TSA.

1.13 The assets of the Project shall be made available on a commercial basis as per the terms and conditions of the Transmission Service Agreement.

SECTION - 2

INFORMATION AND INSTRUCTIONS FOR BIDDERS

SECTION – 2

2. INFORMATION AND INSTRUCTIONS FOR BIDDERS

2.1 Qualification Requirements

2.1.1 The Bidder should be a company duly incorporated under the relevant laws (Bidding Company) or a Consortium of companies (Bidding Consortium) with one of the companies acting as the Lead Member of the Bidding Consortium. The Bidder shall be selected on meeting the Qualification Requirements specified in Section 2 of this RFP, as demonstrated by the Bidder's Technical Bid and the lowest Quoted Transmission Charges discovered from Final Offers quoted during the e-reverse bidding. A Bidding Consortium can participate in the bidding process for the Project if any Member of the Consortium has purchased the RFP document for such Project. Bidder who agree and undertake to procure the products associated with the Transmission System as per provisions of Public Procurement (Preference to Make in India) orders issued by Ministry of Power vide orders No. 11/5/2018 - Coord. Dated 28.07.2020 as amended vide order No. A1/2021-FSC- Part (5) dated 16.11.2021 and No.: P45021/2/2017-PP (BE-II)-Part-4 Vol.II dated 19.07.2024 issued by Ministry of Power for transmission sector, as amended from time to time read with Department for Promotion of Industry and Internal Trade (DPIIT) orders in this regard, shall be eligible hereunder. Further, it is clarified that Procuring Entity as defined in orders shall deemed to have included Selected Bidder and/ or TSP.

Besides, Department of Expenditure, Ministry of Finance in suppression of Oms issued vide Order (Public Procurement No 1) bearing File No. 6/18/2019-PPD dated 23.07.2020, Order (Public Procurement No 2) bearing File No. 6/18/2019-PPD dated 23.07.2020 and Order (Public Procurement No. 3) bearing File No. 6/18/2019-PPD, dated 24.07.2020, Office Memorandum (OM) No. F.18/37/2020-PPD dated 08.02.2021, OM No. F.12/1/2021- PPD(Pt.) dated 02.03.2021, OM No. F.7/10/2021-PPD dated 08.06.2021 and Order (Public Procurement No 4) bearing File No. F.7/10/2021-PPD dated 23.02.2023 as amended from time to time, have issued directions regarding public procurement from a bidder of a country, which shares land border with India are also applicable.

2.1.2 **Technical requirement to be met by the Bidding Company or Lead Member of Bidding Consortium**

The Bidder must fulfill any one of the following technical requirements:

(i) Experience of development of projects in the Infrastructure Sector in the last five (5) years with aggregate capital expenditure of not less than Rs**. 500 Crore** or equivalent USD (calculated as per provisions in Clause 3.4.1**).** However, the capital expenditure of each project shall not be less than **Rs. 100 Crore** or equivalent USD (calculated as per provisions in Clause 3.4.1).

For this purpose, capital expenditure incurred on projects that have been commissioned/completed at least seven (7) days prior to Bid Deadline shall be considered. The capital expenditure discussed above shall be as capitalized and reflected in the audited books of accounts of the Technically Evaluated Entity. In case a clearly identifiable part of a project has been put into commercial operation, the capital expenditure on such part of the project shall be considered.

The Technically Evaluated Entity must have either executed such projects itself or must have held directly or indirectly at least twenty six percent (26%) of the shareholding in the company that has executed the project(s) from the date of financial closure of the project(s) till the time of commissioning/completion of such project(s).

OR

(ii) Experience in construction of project in infrastructure sector: The Technically Evaluated Entity should have received aggregate payments not less than **Rs. 500 Crore** or equivalent USD (calculated as per provisions in Clause 3.4.1) from its client(s) for construction works fully completed during the last 5(five) financial years. However, the payment received from each project shall not be less than **Rs. 100 Crore** or equivalent USD (calculated as per provisions in Clause 3.4.1).

For this purpose, payments received on projects that have been commissioned/ completed at least seven (7) days prior to Bid Deadline shall be considered. Further only the payments (gross) actually received, during such 5 (five) financial years shall qualify for purposes of computing the technical capacity. For the avoidance of doubt, construction works shall not include cost of land, supply of goods or equipment except when such goods or equipment form part of a turn-key construction contract/ EPC contract for the project. Further, in cases where different individual contracts are signed between same entities for the same project, the cumulative payments received under such individual contracts shall be considered for meeting the qualification requirement.

The Technically Evaluated Entity may be the Bidding Company or the Lead Member of a Consortium or an Affiliate or Parent of such Bidding Company or the Lead Member, as the case may be.

Bidders shall furnish documentary evidence duly certified by authorized signatory of the Bidder who has been issued Power of Attorney in support of their technical capability as defined in Clause 2.1.2 of this RFP.

2.1.3 **Financial requirement to be met by the Bidding Company/Bidding Consortium**

2.1.3.1 The Bidder must fulfill following financial requirements:

A. Networth:

Networth should be not less than Rs**. 250.00 Crore** or equivalent USD (calculated as per provisions in Clause 3.4.1**)** computed as the Networth based on unconsolidated audited annual accounts (refer to Note below) of any of the last three (3) financial years as provided in Clause 2.2.3, immediately preceding the Bid Deadline. Also, the Networth of any of the last three (3) financial years should not be negative.

Note: Audited consolidated annual accounts of the Bidder may be used for the purpose of financial criteria provided the Bidder has at least 26% equity in each company whose accounts are merged in the audited consolidated accounts and provided further that the financial capability of such companies (of which accounts are being merged in the

consolidated accounts) shall not be considered again for the purpose of evaluation of the Technical Bid. Bidders shall furnish prescribed Annexure 7 (A) duly certified by authorized signatory of the Bidder who has been issued Power of Attorney and the Statutory Auditor and separate computation sheet for Networth duly certified by Statutory Auditor in support of their financial capability as defined in Clause 2.1.3 of this RFP.

2.1.3.2 The Networth shall be computed in the following manner by the Bidder:

A. Networth

=	Equity share capital
Add:	Reserves
Subtract:	Revaluation Reserves
Subtract:	Intangible Assets
Subtract:	Miscellaneous expenditures to the extent not written off and carry forward losses

2.1.3.3 If the Technical Bid is submitted by a Bidding Consortium the financial requirement shall be met individually and collectively by all the Members in the Bidding Consortium. The financial requirement to be met by each Member of the Bidding Consortium shall be computed in proportion to the equity commitment made by each of them for investment in the Project.

2.1.4 The Bidder may seek qualification on the basis of technical and financial capability of its Parent and/ or its Affiliate(s) for the purpose of meeting the Qualification Requirements. However, in the case of the Bidder being a Consortium, the Lead Member has to meet the technical requirement on its own or by seeking the technical capability of its Parent and/or its Affiliate(s). Authorization for use of such technical or financial capability shall have to be provided from its Parent and/or Affiliate(s) as per Annexure 9. The technical and financial capability of a particular company/ particular project, including its Parents and/or Affiliates, shall not be used directly or indirectly by more than one Bidder/ Member of a Bidding Consortium/ Bidding Company. However, development and construction experience of a particular project may be used by more than one company.

The determination of the relationship of Parent or Affiliate with the Bidding Company or with the Member of the Bidding Consortium, including the Lead Member, shall be on the date at the most seven (7) days prior to the last date of submission of the Bid. Documentary evidence to establish such relationship shall be furnished by the Bidder along with the Technical Bid.

If the Technically Evaluated Entity and/or Financially Evaluated Entity is an entity other than the Bidding Company or a Member in a Bidding Consortium, the Bidding Company or Member relying on such Technically Evaluated Entity and/or Financially Evaluated Entity will have to submit a legally binding undertaking supported by a board resolution from the Technically Evaluated Entity and/or Financially Evaluated Entity or its Ultimate Parent Company, that all the equity investment obligations of the Bidding Company or the Member of the Consortium shall be deemed to be equity investment obligations of the Technically Evaluated Entity and/or Financially Evaluated Entity or its Ultimate Parent Company, and in the event of any default the same shall be met by such evaluated entity or by or the Ultimate Parent Company. The Bidding Company or the Consortium Member

shall have to provide information and documents relating to its relationship with such Technically Evaluated Entity and/or Financially Evaluated Entity including details about the equity shareholding between them as per Annexure 7(C).

2.1.5 A Bidder shall submit only one Bid in the same bidding process, either individually as Bidding Company or as a Member of a Bidding Consortium (including the Lead Member). It is further clarified that any of the Parent/ Affiliate/Ultimate Parent of the Bidder/ Member in a Bidding Consortium shall not separately participate directly or indirectly in the same bidding process. Further, if any Bidder is having a Conflict of Interest with other Bidders participating in the same bidding process, the Bids of all such Bidders shall be rejected.

2.1.6 Notwithstanding anything stated above, BPC reserves the right to verify the authenticity of the documents submitted for meeting the Qualification Requirements and request for any additional information and documents. BPC reserves the right at its sole discretion to contact the Bidder's bank and project references and verify the Bidder's information and documents for the purpose of bid evaluation.

2.1.7 The Qualified Bidder(s) will be required to continue to maintain compliance with the Qualification Requirements throughout the bidding process and till execution of the Transmission Service Agreement. Where the Technically Evaluated Entity and/or the Financially Evaluated Entity is not the Bidding Company or a Member in a Bidding Consortium, as the case may be, the Bidding Company or Member shall continue to be an Affiliate of the Technically Evaluated Entity and/or Financially Evaluated Entity till the execution of the Transmission Service Agreement. Failure to comply with the aforesaid provisions shall make the Bid liable for rejection at any stage.

2.1.8 The Selected Bidder will be required to continue to maintain compliance with the Qualification Requirements till the COD of the Project. Where the Technically Evaluated Entity and/or the Financially Evaluated Entity is not the Bidding Company or a Member in a Bidding Consortium, as the case may be, the Bidding Company or Member shall continue to be an Affiliate of the Technically Evaluated Entity and/or Financially Evaluated Entity till the COD of the Project. Failure to comply with the aforesaid provisions shall be dealt as per provisions of Transmission Service Agreement.

2.1.9 On the Bid Deadline, for the Bidder to be eligible to participate in the bidding process:

a. the Bidder & any of its Affiliate including any Consortium Member & any of its Affiliate, their directors or key personnel should not have been barred or included in the blacklist by any government agency or authority in India, the government of the jurisdiction of the Bidder or Members where they are incorporated or the jurisdiction of their principal place of business, any international financial institution such as the World Bank Group, Asian Development Bank, African Development Bank, Inter-American Development Bank, Asian Infrastructure Investment Bank etc or the United Nations or any of its agencies; or

b. the Bidder & any of its Affiliate including any Consortium Member & any of its Affiliate or their directors should not have been convicted of any offence in India or abroad.

In case any investigation is pending against the Bidder, including any Consortium Member or Affiliate, or CEO or any of the directors/ manager/key managerial personnel of the Bidder /Consortium /Member or their Affiliates, full details of such investigation including the name of the investigating agency, the charge/offence for which the investigation has been launched, name and designation of persons against whom the investigation has been launched and other relevant information should be disclosed while submitting the Bid.

The Bidders shall confirm the above though a notarized affidavit as per Annexure 22.

2.2 Submission of Bid by the Bidder

2.2.1 The information and documents in Technical Bid will be submitted by the Bidder as per the formats specified in Section – 4 (Formats for RFP) of this document

2.2.2 Strict adherence to the formats wherever specified, is required. Wherever, information has been sought in specified formats, the Bidder shall refrain from referring to brochures/ pamphlets. Non-adherence to formats and/ or submission of incomplete information may be a ground for declaring the Technical Bid as non-responsive. Each format has to be duly signed and stamped by the authorized signatory of Bidder.

2.2.3 The Technical Bid shall contain unconsolidated/consolidated audited annual accounts (consisting of unabridged Balance Sheet, Profit and Loss Account, profit appropriation account, Auditors Report, etc.), as the case may be, of Bidding Company or each Member in Consortium including Lead Member or the Financially Evaluated Entity for the last three (3) financial years immediately preceding the last date for submission of Bid for the purpose of calculation of Networth.

In case the annual accounts for the financial year immediately preceding the Bid Deadline is not audited, the Bidder shall give declaration in this regard duly certified by its statutory auditor. In such a case, the Bidder shall provide the audited annual accounts for the three (3) financial years preceding the financial year as above for which the annual accounts have not been audited.

2.2.4 <u>Bid submitted by a Bidding Consortium:</u>

2.2.4.1 The Technical Bid shall contain a legally enforceable Consortium Agreement entered amongst the Members in the Bidding Consortium, designating one of the Members to be the Lead Member (as per Annexure 6). There shall be only one Lead Member which shall continue to hold twenty six percent (26%) equity in the TSP and cannot be changed upto one (1) year from the Commercial Operation Date (COD) of the Project. Each Member in Bidding Consortium shall duly sign the Consortium Agreement making it liable for raising the required funds for its respective equity investment commitment as specified in the Consortium Agreement. In absence of Consortium Agreement, the Technical Bid will not be considered for evaluation and will be rejected.

Provided that the Lead Member of the Bidding Consortium will be required to be liable to the extent of 100% of the total proposed commitment of equity investment of the Bidding Consortium i.e. for both its own equity contribution as well as the equity contribution of other Members.

Provided further that the Consortium Agreement shall not be amended without the explicit approval of the BPC.

The Lead Member of the Consortium will be the single point of contact for the purposes of the bid process before the date of signing of Share Purchase Agreement. Settlement of any dispute amongst the Consortium Members shall not be the responsibility of the BPC and/or the Nodal Agency and the BPC and/or the Nodal Agency shall not bear any liability whatsoever on this account.

2.2.4.2 The Lead Member should designate at the most two persons to represent the Consortium in its dealings with the BPC. The person(s) designated by the Lead Member should be authorized through a Power of Attorney (as per Annexure 3) to perform all tasks including, but not limited to providing information, responding to enquiries, signing of Technical Bid on behalf of the Consortium, etc. The Bidding Consortium shall provide board resolutions from their respective Boards for committing their respective portion of equity requirement for the Project. Additionally, the Lead member shall provide a Board resolution committing to make good any shortfall in the equity for the project, in case of any member not meeting its equity commitment.

2.2.4.3 The Technical Bid should also contain signed Letter of Consent (as per Annexure 2) from each Member in Consortium confirming that the entire Technical and Financial Bids has been reviewed and each element of the Technical and Financial Bids is agreed to by them including investment commitment for the Project.

In addition, the Technical Bid should also contain Board Resolution from each Member of the Consortium other than the Lead Member in favour of their respective authorized representatives for executing the POA, Consortium Agreement and signing of the requisite formats.

2.2.5 <u>Bid submitted by a Bidding Company</u>

2.2.5.1 The Bidding Company should designate at the most two persons to represent the Bidding Company in its dealings with BPC. The person(s) should be authorized to perform all tasks including, but not limited to providing information, responding to enquiries, signing of Technical and Financial Bids etc. The Bidding Company should submit, along with Technical Bid, a Power of Attorney (as per Annexure 3), authorizing the signatory of the Technical and Financial Bids. The Bidding Company shall submit the board resolution committing 100% of equity requirement for the Project, in the Technical Bid.

2.3 Clarifications & Pre-Bid Meeting

2.3.1 The Bidders may seek clarifications or suggest amendments to the RFP by sending an email to the BPC at the email id indicated in Clause 2.14 within the date and time mentioned in Clause 2.7.2. For any such clarifications or amendments, the Bidders should adhere to the format as per Annexure – 19.

2.3.2 Only those Bidders or their authorized representatives, who have purchased the RFP documents are invited to attend the pre-bid meeting(s), which will take place on date as specified in Clause 2.7.2, or any such other date as notified by the BPC. The time and

address of this would be intimated later.

2.3.3 The purpose of the pre-bid meeting will be to clarify any issues regarding the RFP, including in particular, issues raised in writing by the Bidders as per the provisions of Clause 2.3.1.

2.3.4 Non-attendance at the pre-bid meeting will not be a cause for disqualification of a Bidder.

2.3.5 The BPC is not under any obligation to entertain / respond to suggestions made or to incorporate modifications sought for.

2.3.6 In case Bidders need any further clarifications not involving any amendments in respect of final RFP, they should ensure that request for such clarification is submitted through e-mail to the BPC at least ten (10) days prior to the Bid Deadline as mentioned in Clause 2.7.1. The BPC may issue clarifications only, as per its sole discretion, which is considered reasonable by it. Any such clarification issued shall be sent to all the Bidders to whom the RFP has been issued. Clarifications sought after this date shall not be considered in any manner and shall be deemed not to have been received. There shall be no extension in Bid Deadline on account of clarifications sought as per this clause 2.3.6.

2.4 Amendment of RFP

2.4.1. At any time before the timeline mentioned in Clause 2.7.1, the BPC may, for any reason, whether at its own initiative or in response to clarifications requested by any Bidder modify or amend the RFP, including the timelines specified in Clause 2.7.2 by issuance of addendum/modification/errata and/or revised document. Such document shall be notified in writing through a letter or fax or e-mail to all the entities to whom the RFP has been issued and shall be binding on them. In order to ensure that Bidders have reasonable time to take the modification into account in preparing their Bid, or for any other reasons, BPC may at its discretion, extend the due date for submission of Bid. Late receipt of any addendum/modification/errata and/or revised document will not relieve the Bidder from being bound by that modification.

2.4.2. All modifications shall become part of the terms and conditions of this RFP. No interpretation, revision or communication regarding this RFP is valid, unless made in writing.

2.4.3. The amendment to the RFP shall be notified to all the Bidders through the electronic bidding platform and shall be binding on them.

2.5 The Bidding Process

The entire bidding process shall be conducted on electronic bidding platform created by MSTC Limited. The Bid shall comprise of the Technical Bid and the Financial Bid. The Bidders shall submit the Technical Bid & Financial Bid through the electronic bidding platform. In addition to the online submission, the Bidder with lowest Final Offer will be required to submit original hard copies of Annexure 3, Annexure 4 (if applicable), Annexure 6 (if applicable) and Annexure 14 before issuance of LoI. There shall be no physical submission of the Financial Bid.

Evaluation of Technical Bid will be carried out considering the information and documents furnished by the Bidders as required under this RFP. This step would involve responsiveness check, technical and financial evaluation of the details/ documents furnished by the Bidding Company / Bidding Consortium in support of meeting the Qualification Requirements. Bidders meeting the Qualification Requirements, subject to evaluation as specified in Clause **3.2** to **3.4** shall be declared as "Qualified Bidders" and eligible for opening of Initial Offer. The BPC shall also upload the list of all Qualified Bidders and Non-Qualified Bidders on the bidding portal along with the reasons for non-qualification. Also, the Financial Bids of Qualified Bidders shall be opened after at least 24 hours from the date of declaration of the Technically Qualified Bidders.

The Financial Bid will comprise of two rounds. In the first round the Initial Offer (submitted online along with the Technical Bids) of the responsive bids would be opened and Quoted Transmission Charges of Initial Offer shall be ranked on the basis of ascending order for determination of the Qualified Bidders as provided in Section-III of RFP. The Qualified Bidders, in the first fifty per cent of the ranking (with any fraction rounded off to higher integer) or four Qualified Bidders, whichever is higher, shall qualify for participating in the electronic reverse auction stage and submit their Final Offer.

Provided however, in case only one Bidder remains after the evaluation of Technical Bid as per Clause 3.2, 3.3 and Clause 3.4, the Initial Offer of such Bidder shall not be opened and the matter shall be referred to the State Government.

Provided that in the event the number of qualified Technical Bids is between two and four, then each of the qualified Bidder shall be considered as "Qualified Bidders".

Provided that in the event of identical Quoted Transmission Charges discovered from the Initial Offer having been submitted by one or more Bidders, all such Bidders shall be assigned the same rank for the purposes of determination of Qualified Bidders. In such cases, all the Qualified Bidders who share the same rank till 50% of the rank (with any fraction rounded off to higher integer) determined above, shall qualify to participate in the electronic e-reverse auction stage. In case 50% of the ranks (with any fraction rounded off to higher integer) is having less than 4 (four) Bidders and the rank of the fourth (4th) Bidder is shared by more than one (1) Bidder, then all such Bidders who share the rank of the fourth (4th) Bidder shall qualify to participate in the electronic reverse auction.

The applicable ceiling for electronic reverse bidding shall be the lowest Quoted Transmission Charges discovered from the Initial Offer received from the Qualified Bidders. The Qualified Bidders shall be permitted to place their Final Offer on the electronic bidding platform, which is lower than zero point two five (0.25) % of the prevailing lowest Quoted Transmission Charges.

The initial period for conducting the e-reverse bidding should be 2 hours which will be extended by 30 minutes from the last received bid time, if the bid is received during the last 30 minutes of the scheduled or extended bid time. Subsequently, it will be extended again by 30 minutes from the latest received bid time.

The technical details with respect to access to such electronic platform are provided in Annexure-A (Technical Details with respect to electronic reverse auction).

In case of any technical clarification regarding access to the electronic reverse auction platform or conduct of the auction process, the Bidders may contact MSTC Limited directly at the address provided in Annexure-A.

2.5.1 Bid Formats

The Bids in response to this RFP will be submitted online through the electronic bidding platform by the Bidders in the manner provided in Clause 2.9. The Bids shall comprise of the following:

2.5.2 Technical Bid comprising of:

1. Covering Letter (as per prescribed format enclosed as **Annexure 1**);

2. Letter of Consent from Consortium Members in **Annexure 2;**

3. Power of attorney issued by the Bidding Company or the Lead Member of the Consortium, as the case may be, in favour of the person signing the Bid, in the format attached hereto as **Annexure 3**.

   Additionally, in case of a Bidding Consortium, the power of attorney in favour of the Lead Member issued by the other Members of the Consortium shall be provided in as per format attached hereto as **Annexure 4**. Further, the Lead Member shall furnish Board resolution(s) from each Member of the Consortium other than the Lead Member in favour of their respective authorized representatives for executing the POA and signing of the requisite formats.

   Provided that in the event the Bidding Company or the Lead Member of the Consortium or any Member of the Bidding Consortium, as the case may be, is a foreign entity, it may issue Board resolutions in place of power of attorney for the purpose of fulfilling these requirements.

4. Bidder's composition and ownership structure in **Annexure 5**

5. Format for Authorization submitted in Non-Judicial stamp paper duly notarized as per **Annexure 5** from the Bidding Company / each Member of the Consortium authorizing the BPC to seek reference from their respective bankers & others.

6. In case of Bidding Consortium, the Consortium Agreement shall be provided in as per format attached hereto as **Annexure 6**

7. Format of Qualification Requirement (**Annexures 7A, 7B, 7C and 7D)**

8. Bidders Undertakings and details of equity investment in Project (as per prescribed formats 1 and 2 of **Annexure 8**);

9. Authorization from Parent / Affiliate of Bidding Company / Member of Bidding Consortium whose technical / financial capability has been used by the Bidding Company / Member of Bidding Consortium **(Annexure 9)**.

10. Undertaking from the Technically / Financially Evaluated Entity(ies) **OR** Undertaking from the Ultimate Parent Company, for total equity investment commitment, in the prescribed format in **Annexure – 10**, to meet any shortfall in the equity investment by the Selected Bidder in the …… (Insert the name of SPV).

    Note: The effective Equity holding of the Selected Bidder in the …… (Insert the name of SPV), as specified in Clause 2.5.8.1 shall be computed as per the provisions of Clause 2.5.8.3 of this RFP.

    Provided further, in case the Bidding Company or Member of a Consortium, (as the case may be) holds at least twenty six percent (26%) equity in such Technically/ Financially Evaluated Entities, whose credentials have been considered for the purpose of meeting the Qualification Requirements as per the RFP, no such Undertaking shall be required from the Technically / Financially Evaluated Entities.

11. Board resolutions, as per prescribed formats enclosed as Annexure – 11, duly certified by the Company Secretary or any Whole-time Director / Manager (supported by a specific Board Resolution), as applicable to the Bidder and mentioned hereunder,

    (a) Board resolution from the Bidding Company (and any investing Affiliate / Parent Company / Ultimate Parent Company) committing one hundred percent (100%) in aggregate of the equity requirement for the Project - Format-1 of **Annexure 11**;

    (b) Board resolutions from each of the Consortium Member of the Bidding Consortium (and any investing Affiliate / Parent Company / Ultimate Parent Company) together committing to one hundred percent (100%) in aggregate of equity requirement for the Project, in case Bidder is a Bidding Consortium - Format-1 of **Annexure 11**;

    (c) In either of the cases as in (a) or (b) above as applicable, Board resolutions as per Format 2 of **Annexure 11** for total equity investment commitment from the Technically / Financially Evaluated Entity(ies) whose technical / financial credentials had been considered for the purpose of meeting Qualification Requirements as per the RFP

    OR

    Board resolutions as per Format 2 of **Annexure 11** from the Parent Company or the Ultimate Parent Company for total equity investment commitment.

    Provided that such Board resolutions, as specified in (a) or (b) or (c) above, in case of a foreign entity, shall be supported by an unqualified opinion issued by an independent legal counsel practicing in the relevant country, stating that the Board resolutions are in compliance with the applicable laws of the respective jurisdictions of the issuing company and the authorizations granted therein are true and valid.

    For clarity sake, illustrations identifying which Board Resolution shall be applicable in typical cases are provided in **Annexure 11A**.

12. Format for Illustration of Affiliates at the most seven (7) days prior to Bid Deadline, duly certified by Company Secretary and supported by documentary evidence **(Annexure 12)**.

    Certified copy of the Register of Members / Demat Account Statement, Share Certificate, Annual Return filed with ROC etc. submitted as documentary evidence along with **Annexure 12.**

13. Disclosure as per **Annexure 13** regarding participation of any related companies in this bidding process.

14. Bid Bond, as per the prescribed format at **Annexure 14 or** Surety Bond for Bid Security as per the prescribed format at **Annexure 14A or** Payment on Order Instrument to be issued by IREDA/REC/PFC as per the prescribed format at **Annexure 14B**;

15. Checklist for Technical Bid submission requirements as per **Annexure 16**.

16. Last three (3) financial years' unconsolidated / consolidated audited annual accounts / statements, as the case may be, of the Financially Evaluated Entity / Technical Evaluated Entity

17. Unconsolidated audited annual accounts of both the TEE and the Bidding Company/Lead member, as applicable, for the financial years in which financial closure was achieved and the financial year in which the said project was completed / commissioned.

18. Copy of the Memorandum and Articles of Association and certificate of incorporation or other organizational document (as applicable), including their amendments, certified by the Company Secretary of Bidding Company or each Member in case of a Consortium including Lead Member.

19. For each project listed in Annexure 7(D), certified true copy of the certificates of final acceptance and / or certificates of good operating performance duly issued by owners or clients for the project, duly signed by duly signed by authorized signatory.

In addition to the online submission of above formats through the electronic platform, the Bidder with lowest Final Offer will be required to submit original hard copies of Annexure 3, Annexure 4 (if applicable), Annexure 6 (if applicable) and Annexure 14 before issuance of LoI. In case, there is a discrepancy between the online submission and physical documents, the bid would be out rightly rejected and the bidder shall be construed to have engaged in the fraudulent practice as defined in Clause 2.19.3 with consequences as mentioned in Clause 2.19.2.

2.5.3 Financial Bid (as per prescribed format at Annexure-21)

Financial Bid shall comprise of: (i) the Initial Offer; and (ii) the Final Offer. The Initial Offer is required to be submitted along with the Technical Bid. It is hereby clarified that the Financial Bid will comprise of two rounds. In the first round the Initial Offer of the

responsive bids would be opened and Quoted Transmission Charges of Initial Offer shall be ranked on the basis of ascending order for determination of the Qualified Bidders as provided in Section-III of RFP.

In accordance with clause 2.5 of this RFP, the qualified Bidders shall be eligible to participate in the electronic reverse auction and submit their Final Offer.

The applicable ceiling for electronic reverse bidding shall be the lowest Quoted Transmission Charges discovered from the Initial Offer received from the Qualified Bidders. The Qualified Bidders shall be permitted to place their Final Offer on the electronic bidding platform, which is lower than zero point two five (0.25) % of the prevailing lowest Quoted Transmission Charges.

The initial period for conducting the e-reverse bidding should be 2 hours which will be extended by 30 minutes from the last received bid time, if the bid is received during the last 30 minutes of the scheduled or extended bid time. Subsequently, it will be extended again by 30 minutes from the latest received bid time.

The Bidders shall inter-alia take into account the following while preparing and submitting the Initial Offer and Final Offer of Financial Bid :-

a. The Bidders shall quote single annual Quoted Transmission Charges for a period of 35 years commencing from the Scheduled COD of the Project.

b. The Quoted Transmission Charges as per the format at Annexure-21 shall be inclusive of all charges and no exclusions shall be allowed. The Bidders shall take into account all costs including capital and operating, statutory taxes, duties, levies. Availability of the inputs necessary for operation and maintenance of the Project should be ensured by the TSP at the Project site and all costs involved in procuring the inputs (including statutory taxes, duties, levies thereof) at the Project site must be included in the Quoted Transmission Charges.

c. Annexure 21 duly digitally signed by authorized signatory.

2.5.4 Wherever information has been sought in specified formats, the Bidders shall fill in the details as per the prescribed formats and shall refrain from referring to any other document for providing any information required in the prescribed format.

2.5.5 Transmission Charges

2.5.5.1. The Transmission Charges shall be specified in the Transmission Service Agreement and shall be payable to the TSP in Indian Rupees only. The Bidders shall quote single Transmission Charges as per the format at Annexure – 21.

2.5.5.2. The Transmission Charges of the Selected Bidder shall be inserted in Schedule 5 of the Transmission Service Agreement.

2.5.6 Bidders may note that:

a) All the information and documents in Bid shall be submitted in English language only.

b) Bidders shall mention the name, designation, telephone number, fax number, email address of the authorized signatory and complete address of the Bidder in the covering letter.

c) All pages of the Bid submitted shall be initialed and stamped by the authorized signatory on behalf of the Bidder.

d) A Bidder shall submit only one Bid in the same bidding process, either individually as Bidding Company or as a Member of a Bidding Consortium.

e) The technical and financial capability of a particular company / particular project (Parent and/ or Affiliate) shall not be used directly or indirectly by more than one Bidder/ Member of a Bidding Consortium including Lead Member / Bidding Company.

f) This Request for Proposal (RFP) document is not transferable. The RFP document and the information contained therein is for the use only by the Bidder to whom it is issued. It may not be copied or distributed by the recipient to third parties (other than in confidence to the recipient's professional advisors). In the event that the recipient does not continue with its involvement in the Project, this RFP document must be kept confidential.

g) Though adequate care has been taken while preparing this RFP document, the Bidder shall satisfy himself that the document is complete in all respects. Intimation of any discrepancy shall be given to the BPC immediately. If no intimation is received from any Bidder within ten (10) days from the date of issue of RFP document, it shall be considered that the RFP document is complete in all respects and has been received by the Bidder.

h) Bids submitted by the Bidder and opened on scheduled date and time as stipulated in this RFP shall become the property of the BPC and BPC shall have no obligation to return the same to the Bidder.

i) If any Bidder conceals any material information or makes a wrong statement or misrepresents facts or makes a misleading statement in its Bid, in any manner whatsoever, the BPC reserves the right to reject such Bid or cancel the Letter of Intent, if issued. If such event is discovered after the Effective Date, consequences specified in Transmission Service Agreement shall apply.

j) If for any reason the Bid of the Bidder with the lowest Quoted Transmission Charges is not selected or Letter of Intent issued to such Selected Bidder is cancelled or such Bidder withdraws its Bids, the BPC may :-

   i. Invite all the remaining Bidders to revalidate or extend their respective Bid Security, as necessary, and match the Bid of the Bidder with the lowest Quoted Transmission Charges (the "second round of bidding") with following cases:

      - If in the second round of bidding, only one Bidder matches the Bid of the Bidder with lowest Quoted Transmission Charges, it shall be the Selected Bidder.

- If two or more Bidders match the Bid of the Bidder with the lowest Quoted Transmission Charges in the second round of bidding, then the Bidder whose Quoted Transmission Charges was lower as compared to other Bidder(s) in the first round of bidding shall be the Selected Bidder. For example, if the third and fifth lowest Bidders in the first round of bidding offer to match the Bid of the Bidder with lowest Quoted Transmission Charges in the second round of bidding, the said third lowest Bidder shall be the Successful Bidder.

- In the event that no Bidder offers to match the Bid of the Bidder with the lowest Quoted Transmission Charges in the second round of bidding, the BPC may, in its discretion, invite fresh Bids (the "third round of bidding") from all Bidders except the Bidder which quoted the lowest Quoted Transmission Charges in the first round of bidding. In case the Bidders are invited for the third round of bidding to revalidate or extend their Bid Security, as necessary, and offer fresh Bids, they shall be eligible for submission of fresh Bids provided, however, that in such third round of bidding only such Bids shall be eligible for consideration which are lower than the Quoted Transmission Charges of the second lowest Bidder in the first round of bidding; or;

ii. Annul the bid process; or

iii. Take any such measure as may be deemed fit in the sole discretion of the BPC[1]

k) The BPC may, at its sole discretion, ask for additional information / document and/or seek clarifications from a Bidder after the Bid Deadline, inter alia, for the purposes of removal of inconsistencies or infirmities in its Bid. However, no change in the substance of the Quoted Transmission Charges shall be sought or permitted by the BPC.

l) Non submission and/or submission of incomplete data/ information required under the provisions of RFP shall not be construed as waiver on the part of BPC of the obligation of the Bidder to furnish the said data / information unless the waiver is in writing.

m) Bidders shall familiarize itself with the procedures and time frames required to obtain all Consents, Clearances and Permits.

n) All Bidders are required to ensure compliance with the standards and codes mentioned in Clause 1.6.1.2.

o) BPC reserves the right to reject all Bids and/or annul the process of tariff based competitive bidding for selection of Bidder as TSP to execute the Project without assigning any reason. BPC shall not bear any liability, whatsoever, in this regard.

p) Foreign companies submitting the Bid are required to follow the applicable law in their country for execution of POA, Consortium Agreement and affixation of Common Seal (wherever required) and in such cases, their Bid should be supported by an unqualified opinion issued by an independent legal counsel practicing in the relevant country, stating that execution of such POA, Consortium Agreement and the authorizations

[1] **BPC shall record reasons for the same.**

granted therein are true and valid. Foreign companies executing POA outside India shall necessarily pay the adequate stamp charges in India as per the provisions of Stamp Act.

2.5.7 Bidders to inform themselves fully

2.5.7.1. The Bidders shall make independent enquiry and satisfy themselves with respect to all the required information, inputs, conditions and circumstances and factors that may have any effect on his Bid. Once the Bidders have submitted their Bids, the Bidders shall be deemed to have inspected and examined the site conditions (including but not limited to its surroundings, its geological condition and the adequacy of transport facilities to the site), the laws and regulations in force in India, the transportation facilities available in India, the grid conditions, the adequacy and conditions of roads, bridges, railway sidings, ports, etc. for unloading and/or transporting heavy pieces of material and has based its design, equipment size and fixed its price taking into account all such relevant conditions and also the risks, contingencies and other circumstances which may influence or affect the transmission of power. Accordingly, each Bidder acknowledges that, on being selected as Successful Bidder and on acquisition of one hundred percent (100%) of the equity shares of the Sakoli Power Transmission Limited, the TSP shall not be relieved from any of its obligations under the RFP Project Documents nor shall the TSP be entitled to any extension in Scheduled COD mentioned in this RFP or financial compensation for any reason whatsoever.

2.5.7.2. In their own interest, the Bidders are requested to familiarize themselves with all relevant laws of India, including without limitation, the Electricity Act 2003, the Income Tax Act 1961, the Companies Act, 1956 / Companies Act, 2013 (as the case may be), Environment Protection Act 1986 and Forest (Conservation) Act, 1980, the Customs Act, the Foreign Exchange Management Act, Land Acquisition Act, 1894, the Indian Telegraph Act 1885, Labour & Employment Laws of India, [Insurance Act], the regulations/standards framed by the Central Commission, State Commission and CEA, all other related acts, laws, rules and regulations prevalent in India, as amended from time to time.

In addition to the above, the Bidders are required to familiarize themselves with all relevant technical codes and standards, including but not limited to the Grid Code / State Grid Code, Central Electricity Authority (Installation and Operations of Meters) Regulations, 2006, Central Electricity Authority (Technical Standards for Connectivity to the Grid) Regulations, 2007, MERC (Transmission Open Access) Regulations, 2016, Central Electricity Authority (Technical Standards for construction of Electrical Plants and Electric Lines) Regulation, 2022, Central Electricity Authority (Technical Standards for Communication System in Power System Operation) Regulations, 2020, and other relevant Rules/ Regulations/ Guidelines issued by the Central Government, State Government, Central Commission, State Commission and the CEA and amendments thereof.

The BPC shall not entertain any request for clarifications from the Bidders regarding the above laws / acts / rules / regulations / standards. Non-awareness of the same shall not be a reason for the Bidder to request for extension in Bid Deadline. The Bidders undertake and agree that, before submission of their Bid, all such factors as generally brought out above, have been fully investigated and considered while submitting their Bids.

2.5.7.3. The Survey Report has been prepared in good faith, and on best endeavor basis. Neither BPC & Nodal Agency nor their employees or advisors/consultants make any representation or warranty, express or implied, or accept any responsibility or liability, whatsoever, in respect of any statements or omissions made in the Survey Report, or the accuracy, completeness or reliability of information contained therein, and shall incur no liability under any law, statute, rules or regulations as to the accuracy, reliability or completeness of such Survey Report, even if any loss or damage is caused to the Bidders by any act or omission on their part.

2.5.7.4. Bidders shall make best efforts and carry out its own due diligence upon survey report provided by BPC and shall consider all possible techno-commercial factors before submission of Bid. Bidders may also visit the route of the Transmission Lines associated with the Project and the surrounding areas and obtain / verify all information which they deem fit and necessary for the preparation of their Bid. Bidders may also carry out required surveys and field investigation for submission of their Bid. Bidders may also opt for any other route and is not bound to follow the route suggested in survey report provided by BPC.

2.5.7.5. Failure to investigate, examine and to inspect site or subsurface conditions fully shall not be grounds for a Bidder to alter its Bid after the Bid Deadline nor shall it relieve a Bidder from any responsibility for appropriately eliminating the difficulty or costs of successfully completing the Project.

2.5.7.6. The Selected Bidder shall obtain all necessary Consents, Clearances and Permits as required. The Bidders shall familiarize itself with the procedures and time frame required to obtain such Consents, Clearances and Permits.

2.5.7.7. The technical requirements of integrated grid operation are specified in the Indian Electricity Grid Code (IEGC)/ State Grid Code. The Bidders should particularly acquaint themselves with the requirements of connection conditions, operating code for regional grids, scheduling and dispatch instructions/codes, etc. The Bidders are also advised to fully familiarize themselves with the real time grid conditions in the country. Information regarding grid parameters such as voltage and frequency is available on the websites of Regional / State Load Despatch Centres.

2.5.8 Minimum Equity holding/Equity Lock-in

2.5.8.1. (a) The aggregate equity share holding of the Selected Bidder, in the issued and paid up equity share capital of Sakoli Power Transmission Limited shall not be less than Fifty one percent (51%) up to a period of (1) one year after COD of the Project;

(b) In case the Selected Bidder is a Bidding Consortium, then any Member (other than the Lead Member) of such Bidding Consortium shall be allowed to divest its equity as long as the other remaining Members (which shall always include the Lead Member) hold the minimum equity specified in (a) above.

(c) If equity is held by the Affiliates, Parent Company or Ultimate Parent Company, then subject to the second proviso of this Clause 2.5.8.1 (c), such Affiliate, Parent Company or Ultimate Parent Company shall be permitted to transfer its shareholding in Sakoli Power

Transmission Limited to another Affiliate or to the Parent Company / Ultimate Parent Company. If any such shareholding entity, qualifying as an Affiliate / Parent Company / Ultimate Parent Company, is likely to cease to meet the criteria to qualify as an Affiliate / Parent Company / Ultimate Parent Company, the shares held by such entity shall be transferred to another Affiliate / Parent Company / Ultimate Parent Company.

Provided that in case the Lead Member or Bidding Company is holding equity through Affiliate/s, Ultimate Parent Company or Parent Company, such restriction shall apply to such entities.

Provided further, that the aggregate equity share holding of the Bidding Consortium or a Bidding Company in the issued and paid up equity share capital of Sakoli Power Transmission Limited shall not be less than fifty one percent (51%) up to a period of one (1) year after COD of the Project and the lead Member of the Consortium shall have the equity share holding not less than twenty six percent (26%). In case the Selected Bidder is a Bidding Consortium, then any Member (other than the Lead Member) of such Bidding Consortium shall be allowed to divest its equity as long as the other remaining Members (which shall always include the Lead Member) hold the minimum equity specified in (a) above.

(d) All transfer(s) of shareholding of Sakoli Power Transmission Limited by any of the entities referred to above, shall be after prior written intimation to the Nodal Agency

2.5.8.2. The Selected Bidder may invest in the equity share capital of Sakoli Power Transmission Limited through its Affiliate(s) or Ultimate Parent Company or Parent Company. Details of such investment will have to be specified in the Technical Bid as per Format 2 of Annexure 8 of the RFP. If the Selected Bidder so invests through any Affiliate(s) or Ultimate Parent Company or Parent Company, the Selected Bidder shall be liable to ensure that minimum equity holding/lock-in limits specified in Clause 2.5.8.1 and as computed as per the provisions of Clause 2.5.8.3 are still maintained.

2.5.8.3. For computation of effective Equity holding, the Equity holding of the Selected Bidder or its Ultimate Parent Company in such Affiliate(s) or Parent Company and the equity holding of such Affiliate (s) or Ultimate Parent Company in Sakoli Power Transmission Limited shall be computed in accordance with the example given below:

If the Parent Company or the Ultimate Parent Company of the Selected Bidder A directly holds thirty percent (30%) of the equity in Sakoli Power Transmission Limited then holding of Selected Bidder A in Sakoli Power Transmission Limited shall be thirty percent (30%);

If Selected Bidder A holds thirty percent (30%) equity of the Affiliate and the Affiliate holds fifty percent (50%) equity in Sakoli Power Transmission Limited, then for the purposes of ascertaining the minimum equity/equity lock-in requirements specified above, the effective holding of Bidder A in Sakoli Power Transmission Limited shall be fifteen percent (15%), (i.e., 30%* 50%);

2.5.8.4. The provisions as contained in this Clause 2.5.8 and Article 19.1 of the Transmission Service Agreement shall override the terms of the Consortium Agreement submitted by the Bidder as part of the RFP.

2.6 Project Schedule

2.6.1. All Elements of the Project are required to be commissioned progressively as per the schedule given in the following table;

S. No.	Name of the Transmission Element	Scheduled COD in months from Effective Date	Percentage of Quoted Transmission Charges recoverable on Scheduled COD of the Element of the Project	Element(s) which are pre-required for declaring the commercial operation (COD) of the respective Element
1.	Establishment of AIS Sakoli with 2 x 500 MVA, 400/220 kV ICTs & 2 x 315 MVA, 400/132 kV ICTs with 1 x 125 MVAr Bus Reactor at 400 kV level. • 400 / 220 kV, 500 MVA, ICTs – 02 Nos. • 400 / 132 kV, 315 MVA, ICTs – 02 Nos. • 400 kV ICT Bays – 04 Nos. • 220 kV ICT Bays – 02 Nos. • 132 kV ICT Bays – 02 Nos. • 400 kV Line Bays – 04 Nos. • 220 kV Line Bays – 02 Nos. • 132 kV Line Bays – 06 Nos. • 220 kV Transfer Bus Coupler- 1 set • 220 kV Bus Coupler-1 No. • 132 kV Bus Coupler-1 No. • 132 kV Transfer Bus Coupler- 1 set **Future Space Provisions:** • 400/132 kV, 315 MVA, ICT-01 No. • 400 kV ICT Bay-1 No. • 132 kV ICT Bay-1 No.	24 months from Effective Date	100%	All Elements are required to be commissioned simultaneously as their utilization is dependent on commissioning of each other.

S. No.	Name of the Transmission Element	Scheduled COD in months from Effective Date	Percentage of Quoted Transmission Charges recoverable on Scheduled COD of the Element of the Project	Element(s) which are pre-required for declaring the commercial operation (COD) of the respective Element
2.	LILO of Both circuit of 400 kV Wardha (PG)- Raipur (PG) 400 kV D/C line at 400 kV AIS Sakoli (New)			
3.	220 kV D/C line from 400 kV AIS Sakoli (New) to 220 kV Bhandara (existing) • 220 kV line end bays at 220 kV Bhandara (existing)-02 Nos.			
4.	132 kV D/C line from 400 kV AIS Sakoli (New) to 132 kV Deori (proposed) • 132 kV line end bays at 132 kV Deori (proposed)-02 Nos.			
5.	132 kV D/C line from 400 kV AIS Sakoli (New) to 132 kV Sakoli (existing) • 132 kV line end bays at 132 kV Sakoli (existing)-02 Nos.			
6.	132 kV D/C line from 400 kV AIS Sakoli (New) to132 kV Morgaon Arjuni (existing) • 132 kV line end bays at 132 kV Morgaon Arjuni (existing) -02 Nos.			

Note-

Space for 220 kV line bay at Bhandara (Existing), 132 kV line end bays at 132 kV Deori, 132 kV line end bays at 132 kV Moregaon Arjuni (Existing) and 132 kV line end bays at 132 kV Sakoli (Existing) shall be provided by existing Utility. However in case of land constraints TSP may opt for GIS bays or acquire suitable land adjacent to the substations.

In case of LILO lines the technical specifications of Conductor and OPGW should be matching with existing line parameters.

The payment of Transmission Charges for any Element irrespective of its successful commissioning on or before its Scheduled COD shall only be considered after successful commissioning of the Element(s) which are pre-required for declaring the commercial operation of such Element as mentioned in the above table.

Scheduled COD for overall Project: 24 Months from Effective Date

2.7 Due dates

2.7.1. The Bidders should submit the Bids online through the electronic bidding platform before the Bid Deadline i.e. on or before 1500 Hrs (IST) on 17.02.2026. In addition to the online submission, the Bidder with lowest Final Offer will be required to submit original hard copies of Annexure 3, Annexure 4 (if applicable), Annexure 6 (if applicable) and Annexure 14 before issuance of LoI.

2.7.2. Important timelines are mentioned below:

Date	Event
16.12.2025	Issuance of RFP
05.01.2026	Submission of written clarifications/amendments, if any, on the RFP / RFP Project Documents by Bidders so as to reach BPC by 1700 hours. Such written clarifications/amendments shall be in the format provided in Annexure-20.
12.01.2026	Pre-Bid meeting(s)
23.01.2026	Issue of written clarifications and revised RFP documents
02.02.2026	Issue of final RFP Project Documents
17.02.2026	Submission of Bid (Online submission of Bid through electronic bidding portal)
17.02.2026	Opening of Technical Bid
25.02.2026	Shortlisting and announcement of Qualified Bidders on bidding portal
26.02.2026	Opening of Financial Bid - Initial Offer
27.02.2026	Electronic reverse auction (Financial Bid – Final Offer) for the Qualified Bidders.
05.03.2026	Submission of original hard copies of Annexure 3, Annexure 4, Annexure 6, as applicable and Annexure 14 by the bidder with lowest Final Offer
09.03.2026	Selection of Successful Bidder and issue of LOI
19.03.2026	Signing of RFP Project Documents and transfer of Sakoli Power Transmission Limited

2.7.3. To enable BPC to meet the schedule, all Bidders are expected to respond expeditiously during the bidding process. If any milestone/activity falls on a day which is not a working day or which is a public holiday then the milestone/activity shall be achieved/ completed on the next working day.

2.8 Validity of the Bid

2.8.1. The Bid shall remain valid for a period of one hundred and eighty (180) days from the

Bid Deadline. The BPC reserves the right to reject any Bid which does not meet aforementioned validity requirement.

2.8.2. The BPC may solicit the Bidders' consent for an extension of the period of validity of the Bid. The request and the response, thereafter, shall be in writing. In the event any Bidder refuses to extend its Bid validity as requested by the BPC, the BPC shall not be entitled to invoke the Bid Bond. A Bidder accepting the BPC's request for validity extension shall not be permitted to modify its Bid and such Bidder shall, accordingly, extend the validity of the Bid Bond as requested by the BPC within seven (7) days of such request, failing which the Bid shall not be considered as valid.

2.9 Method of Submission

2.9.1. Both the Technical and Financial Bids duly filled in, all formats and supporting shall be scanned and uploaded online through electronic bidding platform in the manner specified in Annexure A

2.9.2. It may be noted that Technical Bid shall not contain any information/document relating to Financial Bid. If Technical Bid contains any such information/documents, the BPC shall not be responsible for premature opening of the Financial Bid.

All pages of the Bid, except for the Bid Bond (Annexure 14) and any other document executed on non-judicial stamp paper, forming part of the Bid and corrections in the Bid, if any, must be signed by the authorized signatory on behalf of the Bidder. It is clarified that the same authorized signatory shall sign all pages of the Bid. However, any published document submitted in this regard shall be signed by the authorized signatory at least on the first and last page of such document.

2.9.3. No change or supplemental information to a Bid already submitted will be accepted after the Bid Deadline, unless the same is requested for by the BPC as per Clause 2.5.6 (k).

Provided that a Bidder shall always have the right to withdraw / modify its Bid before the Bid Deadline. No Technical Bid or Initial Offer shall be modified, substituted or withdrawn by the Bidder on or after the Bid Deadline.

2.10 Preparation cost

2.10.1. The Bidders shall be responsible for all the costs associated with the preparation of the Bid and participation in discussions and attending pre-bid meetings, and finalization and execution of the RFP Project Documents (other than the TSA), etc. BPC shall not be responsible in any way for such costs, regardless of the conduct or outcome of the process of tariff based competitive bidding for selection of Bidder as TSP as per Bidding Guidelines.

2.10.2. The cost of this RFP is Rs. 5,00,000/- (Rupees Five Lakh Only) or US$ 7,000 (US Dollars Seven Thousand Only) plus GST as per applicable rate, which shall be non-refundable. This amount shall be paid via electronic transfer to the following Bank Account:

Bank Name, Address & Branch	ICICI Bank 9A, Phelps Building, Inner Circle, Connaught Place, New Delhi110001
Bank Account Name	REC Power Development & Consultancy Limited

Bank Account No	000705041275
Bank IFSC Code No	ICIC0000007

Immediately after issuance of RFP document, the Bidder shall submit the Pre-Award Integrity Pact in the format as prescribed in Annexure B, which shall be applicable for and during the bidding process, duly signed on each page by any whole-time Director / Authorized Signatory, duly witnessed by two persons, and shall be submitted by the Bidder in two (2) originals in a separate envelope, duly superscripted with Pre-Award Integrity Pact. The Bidder shall submit the Pre-Award Integrity Pact on non-judicial stamp paper of Rs. 100/- each duly purchased from the National Capital Territory of Delhi. In case the Bidder is in a consortium, the Pre-Award Integrity Pact shall be signed and submitted by each member of the Consortium separately.

2.11 Bid Bond

2.11.1. Each Bidder shall submit the Bid accompanied by Bid Bond issued by any of the Banks listed in Annexure-17. The Bid Bond shall be valid for a period of thirty (30) days beyond the validity of the Bid.

2.11.2. Subject to the provisions of Clause 2.15.5, the Bid Bond may be invoked by the BPC or its authorized representative, without any notice, demure, or any other legal process upon occurrence of any of the following:

- Bidder withdraws during the period of Bid Validity as specified in this RFP or as extended by mutual consent of the respective Bidder(s) and the BPC
- Failure to execute the Share Purchase Agreement as per the provisions of Clause 2.15.2; or
- Failure to furnish the Contract Performance Guarantee as per Clause 2.12; or
- Failure to acquire one hundred percent (100%) equity shares of Sakoli Power Transmission Limited, along with all its related assets and liabilities, in accordance with the provisions of Clause 2.15.2; or
- Failure to comply with the provisions of Clause 2.15.5 and Clause 2.15.6, leading to annulment of the award of the Project.
- Bidders submitting any wrong information or making any misrepresentation in their Bid as mentioned in Clause 2.5.6.

Intimation of the reasons of the invocation of the Bid Bond shall be given to the Selected Bidder by the BPC within three (3) working days after such invocation.

2.11.3. The Bid Bond of the Selected Bidder shall be returned on submission of the Contract Performance Guarantee as per Clause 2.12 and the relevant provisions of the Transmission Service Agreement.

2.11.4. The Bid Bond of all the Bidders, whose Bids are declared non-responsive, shall be returned

within a period of thirty (30) days after the date on which the Financial Bids are opened.

2.11.5. The Bid Bond of all unsuccessful Bidders shall be returned and released by the BPC on the same day on which the Sakoli Power Transmission Limited is transferred to the Selected Bidder. The Bid Bond of the Successful Bidder shall be returned on submission of Contract Performance Guarantee as per Clause 2.12 of this RFP and the provisions of the Transmission Service Agreement.

2.12 Contract Performance Guarantee

2.12.1. Within ten (10) days from the date of issue of the Letter of Intent, the Selected Bidder, on behalf of the TSP, will provide to the Nodal Agency the Contract Performance Guarantee for an amount of Rs. 16.70 Crore (Rupees Sixteen Crore and Seventy Lakh Only). The Contract Performance Guarantee shall be initially valid for a period up to three (3) months after the Scheduled COD of the Project and shall be extended from time to time to be valid for a period up to three (3) months after the COD of the Project and thereafter shall be dealt with in accordance with the provisions of the Transmission Service Agreement. The Contract Performance Guarantee shall be issued by any of the banks listed in Annexure-17 as per format given at Annexure- 15 or any of the insurance companies authorized by Insurance Regulatory and Development Authority of India as per format given at Annexure-15 A or PFC/ REC/ IREDA as per Payment on Order Instrument format given at Annexure-15B.

2.12.2. In case the Selected Bidder is unable to obtain the Contract Performance Guarantee for the total amount from any one bank specified in Annexure-17, the Selected Bidder may obtain the same from not more than three (3) banks specified in Annexure-17.

2.13 Opening of Bids

2.13.1. Technical Bid will be opened by the Bid Opening Committee as per the following time schedule and in the office of Chief Engineer (Maharashtra STU), in the online presence of Bidders' representatives who wish to attend:

Opening of Envelope (Technical Bid): 1530 hours (IST) on 17.02.2026.

or such other dates as may be intimated by BPC to the Bidders.

In the event of any of above dates falling on a day which is not a working day or which is a public holiday, then the bids shall be opened on the next working day at the same venue and time.

Opening of Initial Offer: Initial Offer shall be opened by the Bid Opening Committee in presence of the Bid Evaluation Committee at 1530 hours (IST) on 26.02.2026 in the office of Chief Engineer (Maharashtra STU).

2.13.2. The following information from each Bid will be read out to all the Bidders at the time of opening of Technical Bid:

- Name of the Bidding Company / Consortium Members in case of Bidding Consortium.

Information to be provided after opening of Initial Offer:

Only the lowest Initial Offer (s) shall be communicated to all the Qualified Bidders to participate in the e-reverse bidding process. During the e-reverse bidding process only the lowest prevailing bid should be visible to all the bidders on the electronic platform.

2.14 Enquiries

Written clarifications on the RFP and other RFP Project Documents as per Clause 2.3 and 2.4 may be sought from:

Chief Executive Officer,
REC Power Development and Consultancy Limited
(A wholly owned subsidiary of REC Limited)
REC Corporate Head Quarter,
D Block, Plot No. I – 4,
Sec – 29 Gurugram – 122 001
Email: vijay.kulkarni@recpdcl.in & tbcb@recpdcl.in

2.15 Other Aspects

2.15.1. The draft of the Transmission Service Agreement has been attached to this RFP. In addition to above, the following documents have also been attached to this RFP:

a) Share Purchase Agreement

When the drafts of the above RFP Project Documents are provided by the BPC, these RFP Project Documents shall form part of this RFP as per Formats – 1 & 2 of Annexure 20.

Upon finalization of the RFP Project Documents after incorporating the amendments envisaged in Clause 2.4 of this RFP, all the finalized RFP Project Documents shall be provided by BPC to the Bidders at least fifteen (15) days prior to the Bid Deadline.

The Transmission Service Agreement and Share Purchase Agreement shall be signed in required number of originals so as to ensure that one (1) original is retained by each party to the Agreement(s) on the date of transfer of SPV.

2.15.2. Within ten (10) days of the issue of the Letter of Intent, the Selected Bidder shall:

a) provide the Contract Performance Guarantee in favour of the Nodal Agency as per the provisions of Clause 2.12;

b) execute the Share Purchase Agreement and the Transmission Service Agreement;

c) acquire, for the Acquisition Price, one hundred percent (100%) equity shareholding of Sakoli Power Transmission Limited from REC Power Development and Consultancy Limited, who shall sell to the Selected Bidder, the equity shareholding of Sakoli Power Transmission Limited, along with all its related assets and liabilities;

Stamp duties payable on purchase of one hundred percent (100%) of the equity shareholding of Sakoli Power Transmission Limited, along with all its related assets and liabilities, shall also be borne by the Selected Bidder.

Provided further that, if for any reason attributable to the BPC, the above activities are not completed by the Selected Bidder within the above period of ten (10) days as mentioned in this Clause, such period of ten (10) days shall be extended, on a day for day basis till the end of the Bid validity period.

2.15.3. After the date of acquisition of the equity shareholding of Sakoli Power Transmission Limited, along with all its related assets and liabilities, by the Selected Bidder,

i. the authority of the BPC in respect of this Bid Process shall forthwith cease and any actions to be taken thereafter will be undertaken by the Nodal Agency,
ii. all rights and obligations of Sakoli Power Transmission Limited, shall be of the TSP,
iii. any decisions taken by the BPC prior to the Effective Date shall continue to be binding on the Nodal Agency and
iv. contractual obligations undertaken by the BPC shall continue to be fulfilled by the TSP.

2.15.4. Within five (5) working days of the issue of the acquisition of the SPV by the Successful Bidder, the TSP shall apply to the State Commission for grant of Transmission License and make an application to the State Commission for the adoption of Transmission Charges, as required under Section – 63 of The Electricity Act 2003.

2.15.5. If the Selected Bidder / TSP fails or refuses to comply with any of its obligations under Clauses 2.15.2, 2.15.3 and 2.15.4, and provided that the other parties are willing to execute the Share Purchase Agreement and REC Power Development and Consultancy Limited is willing to sell the entire equity shareholding of Sakoli Power Transmission Limited, along with all its related assets and liabilities, to the Selected Bidder, such failure or refusal on the part of the Selected Bidder shall constitute sufficient grounds for cancellation of the Letter of Intent. In such cases, the BPC / its authorized representative(s) shall be entitled to invoke the Bid Bond of the Selected Bidder.

2.15.6. If the TSP fails to obtain the Transmission License from the State Commission, it will constitute sufficient grounds for annulment of award of the Project.

2.15.7. The annulment of award, as provided in Clauses 2.15.5 and 2.15.6 of this RFP, will be done by the State Government on the recommendations of Empowered Committee. However, before recommending so, Empowered Committee will give an opportunity to the Selected Bidder / TSP to present their view point.

2.15.8. The annulment of the award, under Clause 2.15.5 or 2.15.6 of this RFP, shall be sufficient grounds for blacklisting the bidder, whose award has been annulled, for a period of five years or more, as decided by the Empowered Committee, provided that the blacklisting shall be done only after giving the bidder an opportunity for showing cause.

2.16 Confidentiality

2.16.1. The parties undertake to hold in confidence this RFP and RFP Project Documents and not to disclose the terms and conditions of the transaction contemplated hereby to third parties, except:

a) to their professional advisors;

b) to their officers, contractors, employees, agents or representatives, financiers, who need to have access to such information for the proper performance of their activities;

c) disclosures required under Law, without the prior written consent of the other parties of the concerned agreements.

Provided that the TSP agrees and acknowledges that the Nodal Agency may at any time, disclose the terms and conditions of the RFP and RFP Project Documents to any person, to the extent stipulated under the Law or the Bidding Guidelines.

2.17 Right of the BPC to reject any Bid

BPC reserves the right to reject all or any of the Bids/ or cancel the RFP without assigning any reasons whatsoever and without any liability.

2.18 Non submission and/or submission of incomplete data/ information required under the provisions of RFP shall not be construed as waiver on the part of BPC of the obligation of the Bidder to furnish the said data / information unless the waiver is in writing.

2.19 Fraudulent and Corrupt Practices

2.19.1. The Bidders and their respective officers, employees, agents and advisers shall observe the highest standard of ethics during the Bid process and subsequent to the issue of the LoI Notwithstanding anything to the contrary contained herein, or in the LoI, the BPC shall reject a Bid, withdraw the LoI, as the case may be, without being liable in any manner whatsoever to the Bidder, if it determines that the Bidder has, directly or indirectly or through an agent, engaged in corrupt practice, fraudulent practice, coercive practice, undesirable practice or restrictive practice in the Bid process. In such an event, the BPC shall forfeit the Bid Bond, without prejudice to any other right or remedy that may be available to the BPC hereunder or otherwise.

2.19.2. Without prejudice to the rights of the BPC under Clause 2.19.1 hereinabove and the rights and remedies which the BPC may have under the LoI, if a Bidder is found by the BPC to have directly or indirectly or through an agent, engaged or indulged in any corrupt practice, fraudulent practice, coercive practice, undesirable practice or restrictive practice during the Bid process, or after the issue of the LoI, such Bidder & its Affiliates shall not be eligible to participate in any tender or RFP issued by any BPC for an indefinite period from the date such Bidder is found by the BPC to have directly or indirectly or through an agent, engaged or indulged in any corrupt practice, fraudulent practice, coercive practice, undesirable practice or restrictive practices, as the case may be.

2.19.3. For the purposes of this Clause 2.19, the following terms shall have the meaning

hereinafter respectively assigned to them:

a) **"corrupt practice"** means (i) the offering, giving, receiving, or soliciting, directly or indirectly, of anything of value to influence the actions of any person connected with the Bid process (for avoidance of doubt, offering of employment to or employing or engaging in any manner whatsoever, directly or indirectly, any official of the BPC who is or has been associated or dealt in any manner, directly or indirectly with the Bid process or the LoI or has dealt with matters concerning the Transmission Service Agreement or arising there from, before or after the execution thereof, at any time prior to the expiry of one year from the date such official resigns or retires from or otherwise ceases to be in the service of the BPC, shall be deemed to constitute influencing the actions of a person connected with the Bid Process); or (ii) engaging in any manner whatsoever, whether during the Bid Process or after the issue of the LoI or after the execution of the Transmission Service Agreement, as the case may be, any person in respect of any matter relating to the Project or the LoI or the Transmission Service Agreement, who at any time has been or is a legal, financial or technical adviser of the BPC in relation to any matter concerning the Project;

b) **"Fraudulent practice"** means a misrepresentation or omission of facts or suppression of facts or disclosure of incomplete facts, in order to influence the Bid process;

c) **"Coercive practice"** means impairing or harming, or threatening to impair or harm, directly or indirectly, any person or property to influence any person's participation or action in the Bid process;

d) **"undesirable practice"** means (i) establishing contact with any person connected with or employed or engaged by the BPC with the objective of canvassing, lobbying or in any manner influencing or attempting to influence the Bid process; or (ii) having a Conflict of Interest; and

e) **"Restrictive practice"** means forming a cartel or arriving at any understanding or arrangement among Bidders with the objective of restricting or manipulating a full and fair competition in the Bid process.

SECTION - 3

EVALUATION OF THE TECHNICAL AND FINANCIAL BID

SECTION 3

1. EVALUATION OF BID

3.1. The evaluation process of Technical Bid comprises the following five steps:

Step I – Responsiveness check
Step II- Compliance with submission requirements
Step III– Evaluation of Technical Bids
Step IV– Evaluation of Financial Bids
Step V – Bidder Selection

3.2. STEP I – Responsiveness check

The Technical Bid submitted by the Bidder shall be initially scrutinized to establish "Responsiveness". Subject to clause 2.5.6 (k), any of the following conditions shall cause the Technical Bid to be "Non-responsive":

a) Technical Bid that are incomplete.

b) Technical Bid not signed by authorized signatory and / or stamped in the manner indicated in this RFP.

c) All pages of the Technical Bid submitted but not initialed by the authorized signatories on behalf of the Bidder.

d) Technical Bid not including the covering letter as per Annexure 1.

e) Technical Bid submitted by a Bidding Consortium not including the Consortium Agreement.

f) Technical Bid contains material inconsistencies in the information and documents submitted by the Bidder, affecting the Qualification Requirements.

g) Bidder submitting or participating in more than one Bid either as a Bidding Company or as a Member of Bidding Consortium.

h) More than one Member of the Bidding Consortium or a Bidding Company using the credentials of the same Parent/Affiliate.

i) Information not submitted in formats specified in the RFP.

j) Applicable Board resolutions, or any other document, as provided in Clause 2.5.2, not being submitted;

~~k)~~ Bid not accompanied by a valid Bid Bond~~;~~

l) Non submission of power of attorney, supported by a Board resolution;

m) Bid validity being less than that required as per Clause 2.8 of this RFP;

n) Bid not containing Format-1 (Bidders' Undertakings) of Annexure-8;

o) Bidder having Conflict of Interest

p) The Bidder has not submitted a disclosure as per Annexure 13.

q) Bidders delaying in submission of additional information or clarifications sought by the BPC.

r) If the Bidder makes any misrepresentation as specified in Clause 3.7.

s) Bid being conditional in nature.

t) More than one Member of the Bidding Consortium or a Bidding Company using the credentials of the same Parent/Affiliate.

3.3. STEP II - Compliance with submission requirements

Each Bidder's Technical Bid shall be checked for compliance with the submission requirements set forth in this RFP before the evaluation of Technical Bid is taken up. Annexure 16 and Annexure 11A shall be used to check whether each Bidder meets the stipulated requirements.

3.4. STEP III -Evaluation of Technical Bid

Evaluation of Technical Bid will be carried out considering the information and documents furnished by the Bidders as required under this RFP. This step would involve technical and financial evaluation of the details/ documents furnished by the Bidding Company / Bidding Consortium in support of meeting the Qualification Requirements

3.4.1. Interpolation of financial data.

For the Qualification Requirements data provided by the Bidders in foreign currency, equivalent rupees of Networth will be calculated using bills selling exchange rates (card rate) USD/INR of State Bank of India prevailing on the date of closing of the accounts for the respective financial year as certified by their Banker.

For the purpose of calculating the aggregate capital expenditure/construction experience of the projects completed/ commissioned where such projects are executed outside India and capital expenditure is denominated in foreign currency, bills selling exchange rates (card rate) USD/INR of State Bank of India prevailing on the date of closing of the financial year in which the projects were completed and as certified by their Banker shall be considered.

For the projects executed in the current financial year bills selling (card rate) USD/INR of State Bank of India prevailing on seven (7) days prior to the last date of submission of Technical Bid and as certified by their Banker shall be considered.

For currency other than USD, Bidders shall convert such currency into USD as per the exchange rates certified by their Banker prevailing on the relevant date and used for such

conversion. Such Bidders shall submit necessary certification from their Banker for the exchange rate used in the conversation.

If the exchange rate for any of the above dates is not available, the rate for the immediately available previous day shall be taken into account.

3.4.2. Bidders meeting the Qualification Requirements, subject to evaluation as specified in Clauses 3.2 to 3.4 shall be declared as Qualified Bidders and eligible for opening of Initial Offer.

3.4.3. The BPC shall upload the list of all Qualified Bidders and Non-Qualified Bidders on the bidding portal along with the reasons for non-qualification.

3.5. STEP IV - Evaluation of Financial Bids

3.5.1. The Bids which have been found Qualified by the BPC, based on the Steps I to III as specified above in Clauses 3.2.to 3.4, shall be opened and Quoted Transmission Charges of such Initial Offer shall be ranked on the basis of the ascending Initial Offer submitted by each Qualified Bidder.

Based on such ranking of the Qualified Bidders, in the first fifty per cent of the ranking (with any fraction rounded off to higher integer) or four Qualified Bidders, whichever is higher, shall qualify for participating in the electronic reverse auction.

Provided however, in case only one Bidder remains after the Evaluation of Technical Bid (Steps 1 to III) as per Clause 3.2 to 3.4, the Initial Offer of such Bidder shall not be opened and the matter shall be referred to the State Government.

Provided that in the event the number of Qualified Bidders is between two and four, then each of the responsive Bidder shall be considered as Qualified Bidders.

Provided that in the event of identical Quoted Transmission Charges discovered from the Initial Offer having been submitted by one or more Bidders, all such Bidders shall be assigned the same rank for the purposes of determination of Qualified Bidders. In such cases, all Qualified Bidders who shares the same rank till 50% of the rank (with any faction rounded off to higher integer) determined above, shall qualify to participate in the electronic reverse auction stage. In case 50% of the rank is having less than four (4) Bidders and the rank of the fourth (4th) Bidder is shared by more than one Bidder, then all such all such Bidders who share the rank of the fourth Bidder shall qualify to participate in the electronic reverse auction.

3.5.2. The Financial Bids comprising of both Initial Offer and Final Offer submitted by the Bidders shall be scrutinized to ensure conformity with the provisions of Clause 2.5.3 of this RFP. Any Bid not meeting any of the requirements as per Clause 2.5.3 of this RFP may cause the Bid to be considered "Non-responsive", at the sole decision of the BPC. Financial Bid not in conformity with the requirement of SI. No. (c) of Clause 2.5.3 of this RFP shall be rejected.

3.5.3 The Bidders shall quote the single annual Quoted Transmission Charges as specified in the format at Annexure – 21.

3.6. STEP V - Bidder Selection

3.6.1. The prevailing lowest Quoted Transmission Charges discovered from Final Offers shall only be displayed during the e-reverse bidding and the Bidder quoting such Final Offer will always remain anonymous during the e-reverse bidding. The Bidder with the prevailing lowest Quoted Transmission Charges discovered from Final Offers at the close of the scheduled or extended period of e-reverse bidding as mentioned in clause 2.5 shall be declared as the Successful Bidder, subject to verification of the original hard copies of Annexure 3, Annexure 4 (if applicable), Annexure 6 (if applicable) and Annexure 14. The Letter of Intent shall be issued to such Successful Bidder in two (2) copies.

However, if no bid is received during the e-reverse bidding stage then the Bidder with lowest quoted initial transmission charges ("Initial Offer") during e-bidding stage shall be declared as the Successful Bidder, subject to verification of the original hard copies of Annexure 3, Annexure 4 (if applicable), Annexure 6 (if applicable) and Annexure 14. The Letter of Intent shall be issued to such Successful Bidder in two (2) copies.

In case, there is a discrepancy between the online submission and physical documents, the bid would be out rightly rejected and the bidder shall be construed to have engaged in the fraudulent practice as defined in Clause 2.19.3 with consequences as mentioned in Clause 2.19.2. Further, in such a case, the provisions of Clause 2.5.6 (j) shall apply.

3.6.2. The Selected Bidder shall unconditionally accept the LoI, and record on one (1) copy of the LoI, "Accepted unconditionally", under the signature of the authorized signatory of the Successful Bidder and return such copy to the BPC within seven (7) days of issue of LoI.

3.6.3. If the Successful Bidder, to whom the Letter of Intent has been issued, does not fulfill any of the conditions specified in Clauses 2.15.2, 2.15.3 and Clause 2.15.4, then subject to Clause 2.15.5, the BPC reserves the right to annul the award of the Project and cancel the Letter of Intent. Further, in such a case, the provisions of Clause 2.5.6 (j) shall apply.

3.6.4. The BPC, in its own discretion, has the right to reject all Bids if the Quoted Transmission Charges are not aligned to the prevailing prices.

3.7. Misrepresentation by the Bidder

If the Bidder conceals any material information or makes a wrong statement or misrepresents facts or makes a misleading statement in the Technical Bid or Bid, as the case may be, in any manner whatsoever, in order to create circumstances for the acceptance of its Technical Bid/Bid, the BPC reserves the right to reject such Technical Bid/Bid, and/ or cancel the Letter of Intent, if issued. Further, in case Letter of Intent is cancelled, consequences as per provisions of the RFP shall follow.

3.8. Disposition of Technical Bid

3.8.1. Technical Bid found to be Non-responsive as per Clause **3.2,** due to any of the following conditions, shall be liable for rejection.

- Technical Bid that is incomplete.

- Technical Bid not signed by authorized signatory and / or stamped in the manner indicated in this RFP.
- All pages of the Technical Bid submitted but not initialed by the authorized signatories on behalf of the Bidder.
- Technical Bid not including the covering letter as per Annexure 1.
- Technical Bid contains material inconsistencies in the information and documents submitted by the Bidder, affecting the Qualification Requirements.
- Information not submitted in formats specified in the RFP.
- The Bidder has not submitted a disclosure as per Annexure 13**.**
- Bidders delaying in submission of additional information or clarifications sought by the BPC.

3.8.2. Technical Bid found to be Non-responsive as per Clause **3.2,** due to any of the following conditions, shall be rejected.

- Technical Bid not received by the scheduled date and time.
- Technical Bid submitted by a Bidding Consortium not including the Consortium Agreement.
- Bidder submitting or participating in more than one response either as a Bidding Company or as a Member of Bidding Consortium.
- More than one Member of the Bidding Consortium or a Bidding Company using the credentials of the same Parent/Affiliate.
- Technical Bid having Conflict of Interest.
- If the Bidder makes any misrepresentation as specified in Clause **3.7.**

3.9. BPC reserves the right to interpret the Bid in accordance with the provisions of this RFP document and make its own judgment regarding the interpretation of the same. In this regard, BPC shall have no liability towards any Bidder and no Bidder shall have any recourse to BPC with respect to the qualification process.

BPC shall evaluate Bid using the process specified in Clause 3.1 to 3.6, at its sole discretion. BPC's decision in this regard shall be final and binding.

SECTION - 4

ANNEXURES FOR BID

SECTION – 4

I. Formats for Bid

The following formats are required to be included in the Bidder's Technical and Financial Bid. These formats are designed to demonstrate the Bidder's compliance with the Qualification Requirements set forth in Clause 2.1 of Section – 2.

Technical Bid

1. Format for the Covering Letter
2. Format for Letter of Consent from Consortium Members
3. Format for evidence of authorized signatory's authority (Power of Attorney)
4. Format for Power of Attorney from to be provided by each of the other Members of the Consortium in favor of the Lead Member
5. Format for Bidder's composition and ownership structure and Format for Authorization
6. Format for Consortium Agreement
7. Formats for Qualification Requirement
8. Format of Bidders Undertaking and details of Equity Investment
9. Authorization from Parent/Affiliate of Bidding Company/Member of Bidding Consortium whose technical/financial capability has been used by the Bidding Company/Member of Bidding Consortium.
10. Undertaking from the Technically / Financially Evaluated Entity(ies) or from Ultimate Parent Company for equity investment
11. Format of Board Resolutions
12. Format for Illustration of Affiliates
13. Format for Disclosure
14. Format for Bid Bond
15. Format for Contract Performance Guarantee
16. Checklist for Technical Bid submission requirements
22. Format for Affidavit

In addition to the online submission, the Bidder with lowest Final Offer will be required to submit original hard copies of Annexure 3, Annexure 4 (if applicable), Annexure 6 (if applicable) and Annexure 14 before issuance of LoI.

Financial Bid

21. Format for Financial Bid

II. The following formats are for the information to the Bidders to enable them to submit their Bid.

11A. Illustration For Applicable Board Resolution Requirements Under Clause 2.5.2
17. List of Banks
18. GRID Map of the Project
19. Format for clarification/amendments on the RFP/RFP Project Documents
20. Formats for RFP Project Documents

Bidder may use additional sheets to submit the information for its detailed Bid.

ANNEXURE 1 - COVERING LETTER

(The covering letter should be on the Letter Head of the Bidding Company/ Lead Member of the Consortium)

Date: ……
From: ……
……
……
Tel. No.: ….....
Fax No.: .....
E-mail address: .....

To,

Chief Executive Officer,
REC Power Development and Consultancy Limited
(A wholly owned subsidiary of REC Limited)
REC Corporate Head Quarter,
D Block, Plot No. I – 4,
Sec – 29 Gurugram – 122 001

Dear Sir,

Sub: **Bid for selection of Bidder as Transmission Service Provider to develop Intra-State Transmission Project i.e. "Establishment of 400/220/132 kV AIS Sakoli (Dist. Bhandara)" through tariff based competitive bidding process.**

1. Being duly authorized to present and act on behalf of M/s ……. (insert name of Bidding Company / Bidding Consortium) (hereinafter called the "Bidder") and having read and examined in detail the Request for Proposal (RFP) document, the undersigned hereby submit our Technical Bid with duly signed formats and Financial Bid (Initial Offer) as stipulated in RFP document for your consideration.

2. It is confirmed that our Bid is consistent with all the requirements of submission as stated in the RFP document and subsequent clarifications/amendments as per Clause 2.3 and 2.4 of RFP.

3. The information submitted in our Bid is complete, is strictly as per the requirements stipulated in the RFP document and is correct to the best of our knowledge and understanding. We would be solely responsible for any errors or omissions in our Bid.

4. We hereby agree and undertake to procure the products associated with the Transmission System as per provisions of Public Procurement (Preference to Make in India) orders issued by Ministry of Power vide orders No. 11/5/2018 - Coord. dated 28.07.2020 for transmission sector, as amended vide order No. A-1/2021-FSC- Part(5) dated 16.11.2021 and No.: P45021/2/2017-PP (BE-II)-Part-4 Vol.II dated 19.07.2024 issued by Ministry of Power for transmission sector, as may be further as amended from time to time read with Department for Promotion of Industry and Internal Trade (DPIIT) orders in this regard.

We hereby also agree and undertake to comply with Department of Expenditure, Ministry of Finance revised OM dated 23.02.2023 issued in suppression of Order (Public Procurement No 1) bearing File No. 6/18/2019-PPD dated 23.07.2020, Order (Public Procurement No 2) bearing File No. 6/18/2019-PPD dated 23.07.2020 and Order (Public Procurement No. 3) bearing File No. 6/18/2019-PPD, dated 24.07.2020, Office Memorandum (OM) No. F.18/37/2020-PPD dated 08.02.2021, OM No. F.12/1/2021-PPD(Pt.) dated 02.03.2021, OM No. F.7/10/2021-PPD dated 08.06.2021 and Order (Public Procurement No 4) bearing File No. F.7/10/2021-PPD dated 23.02.2023 as amended from time to time, regarding public procurement from a bidder of a country, which shares land border with India.

5. We hereby agree to comply with Ministry of Power order no. 25-11/6/2018 – PG dated 02.07.2020 as amended from time to time.

6. We are herewith submitting legally binding board resolution for the total equity requirement of the Project.

7. We hereby confirm that in accordance with Clause 2.1.4 of the RFP, we are herewith submitting legally binding undertaking supported by a board resolution from the ……..(Insert name of Technically Evaluated Entity and/or Financially Evaluated Entity or its Ultimate Parent Company, as the case may be) that all the equity investment obligations of …….. (Insert name of the Bidding Company) shall be deemed to be equity investment obligations of the …… (Insert name of Technically Evaluated Entity and/or Financially Evaluated Entity or its Ultimate Parent Company, as the case may be) and in the event of any default by……. (Insert name of the Bidding Company), the same shall be met by ……. (Insert name of Technically Evaluated Entity and/or Financially Evaluated Entity or its Ultimate Parent Company, as the case may be).

[Sl. No 7 to be inserted only in case the Bidder is a Bidding Company / Lead Member of a Consortium and has sought qualification on the basis of technical and financial capability of its Affiliate(s) and/or its Parent]

8. We confirm that there are no litigations or disputes against us, which materially affect our ability to fulfill our obligations with regard to the Project.

9. We hereby confirm that we shall continue to maintain compliance with Qualification Requirements till the execution of the Transmission Service Agreement. Further, in case we emerge as Selected Bidder for the Project, we shall continue to maintain compliance with Qualification Requirements till the COD of the Project.

10. We confirm that we have studied the provisions of relevant Indian laws and regulations required to enable us to build, own, operate and transfer the said Project and to prepare this Bid.

11. We hereby confirm that we shall abide unreservedly with BPC's decision in the qualification process for selection of Qualified Bidder and further warrant that under no circumstances we shall challenge either the BPC's decision or its right to make such decision at any time in the future.

12. We confirm that the Bid shall remain valid for a period of one eighty (180) days from the Bid Deadline.

13. The details of contact person are furnished as under:
Name: ……
Designation: ……
Name of the Company: ……
Address of the Bidder: ……
Phone Nos.: …….
Fax Nos.: …….
E-mail address: …….

14. Bid Bond

We have enclosed a Bid Bond of Rupees ……. Crores (Rs. …….) only or US$ ..... (…….US Dollars), in the form of bank guarantee no……[Insert number of the Bank Guarantee] dated……..[Insert Date of the Bank Guarantee] as per your proforma (Annexure-14) from…….[Insert name of bank providing Bid Bond] and valid up to …….in terms of Clause 2.11 of the RFP
or
in the form of insurance surety bond no …….. [Insert number of the Insurance Surety Bond] dated …….. [Insert Date of the Insurance Surety Bond] as per your proforma (Annexure-14A) from ..... [Insert name of Insurance Company providing Insurance Surety bond] and valid up to …….. in terms of Clause 2.11 of the RFP or
in the form of Payment on Order Instrument no. …… [Insert number of the Instrument] dated …..... [Insert Date of the Instrument] as per your proforma (Annexure-14B) from ..... [Insert name of company issuing Payment on Order Instrument] and valid up to ..... in terms of Clause 2.11 of the RFP..

15. Acceptance

We hereby unconditionally and irrevocably agree and accept that the decision made by the BPC on any matter regarding or arising out of the RFP shall be binding on us. We hereby expressly waive any and all claims in respect of Bid process.

16. Familiarity With Relevant Indian Laws & Regulations

We confirm that we have studied the provisions of relevant Indian laws and regulations as required to enable us to submit this Bid and execute the RFP Project Documents (other than TSA), in the event of our selection as the TSP. We further undertake and agree that all such factors as mentioned in Clause 2.5.7 of RFP have been fully examined and considered while submitting the Bid.

It is confirmed that our Bid is consistent with all the requirements of submission as stated in the RFP and subsequent communications from BPC.

The information submitted in our Bid is complete, strictly as per the requirements stipulated in the RFP and is correct to the best of our knowledge and understanding. We would be solely responsible for any errors or omissions in our Bid.

We confirm that we have not taken any deviation so as to be deemed non-responsive with respect to the provisions stipulated at Clause 2.5.1, of this RFP.

Thanking you,

Yours sincerely,

…….
(Name and Signature of the authorized signatory in whose name Power of Attorney/ Board Resolution as per Clause 2.5.2 is issued)

Name: ……
Designation: ……
Address: ……

Date: …….
Place: ……

Company Rubber Stamp

ANNEXURE 2 - LETTER OF CONSENT FROM CONSORTIUM MEMBERS

(On the letter head of each Member of the Consortium including Lead Member)

Date: ……
From: ……
……
……
Tel. No.: ……
Fax No.: ……
E-mail address: ……..

To,

Chief Executive Officer,
REC Power Development and Consultancy Limited
(A wholly owned subsidiary of REC Limited)
REC Corporate Head Quarter,
D Block, Plot No. I – 4,
Sec – 29 Gurugram – 122 001

Dear Sir,

Sub: **Bid for selection of Bidder as Transmission Service Provider to develop Intra-State Transmission Project i.e. "Establishment of 400/220/132 kV AIS Sakoli (Dist. Bhandara)" through tariff based competitive bidding process.**

We, the undersigned Member of …… (Insert name of the Bidding Consortium) have read, examined and understood the RFP document for the short-listing of Bidders as prospective TSP for "**Establishment of 400/220/132 kV AIS Sakoli (Dist. Bhandara)"** through tariff based competitive bidding process. We hereby confirm our concurrence with the Bid including in particular the Consortium Agreement submitted by ……. (Insert name of the Lead Member) in response to the RFP document.

We hereby confirm our commitment to participate in the said Bidding Consortium and invest ……. % of the total equity requirement for the Project as per the terms of the Consortium Agreement dated …… and board resolution for such investment commitment is enclosed herewith.

We hereby confirm that in accordance with Clause 2.1.4 of the RFP, we are enclosing legally binding undertaking supported by a board resolution from the ……. (Insert name of Technically Evaluated Entity and / or Financially Evaluated Entity or its Ultimate Parent Company, as the case may be) that all the equity investment obligations of ……. (Insert name of the Member) shall be deemed to be equity investment obligations of the …… (Insert name of Technically Evaluated Entity and / or Financially Evaluated Entity or its Ultimate Parent Company, as the case may be) and in the event of any default by……. (Insert name of the Member), the same shall be met by……. (Insert name of Technically Evaluated Entity and / or Financially Evaluated Entity or its Ultimate Parent Company, as the case may be). [Insert if applicable]

[To be inserted by the Lead Member only] We are also enclosing legally binding board resolution for the total equity requirement of the Project in case of any breach of any of the equity investment commitment by any of the Consortium Members, in line with the provisions of the Consortium Agreement dated ……. [Bidder to insert date of Consortium Agreement].

The details of contact person are furnished as under:

Name: …….
Designation: …….
Name of the Company: …….
Address: …….
Phone Nos.: …….
Fax Nos.: …….
E-mail address: …….

Dated the ……. day of ……. of 20…

Thanking you,

Yours faithfully,

……
(Signature)

Name: …….
Designation: …….

(Signature, Name, Designation of Authorized Signatory of Consortium Member and Company's Seal)

ANNEXURE 3 - FORMAT FOR EVIDENCE OF AUTHORIZED SIGNATORY'S AUTHORITY (POWER OF ATTORNEY)

POWER OF ATTORNEY

(To be on non-judicial stamp paper of appropriate value as per Stamp Act relevant to place of execution. Foreign companies submitting bids are required to follow the applicable law in their country)

Know all men by these presents, We …….(name and address of the registered office of the Bidder) do hereby constitute, appoint and authorize Mr./Ms……(name and residential address) who is presently employed with us and holding the position of ……. as our attorney, to do in our name and on our behalf, all such acts, deeds and things necessary in connection with or incidental to our Bid for selection of Bidder as Transmission Service Provider for "**Establishment of 400/220/132 kV AIS Sakoli (Dist. Bhandara)"** through tariff based competitive bidding process in the country of India, including signing and submission of all documents related to the Bid, including, undertakings, letters, certificates, acceptances, clarifications, guarantees, etc., making representations to the BPC, and providing information / responses to the BPC, representing us in all matters before the BPC, and generally dealing with the BPC in all matters in connection with our Bid for the said Project till the completion of the bidding process in accordance with the RFP and signing of the Share Purchase Agreement by all the parties thereto.

We hereby agree to ratify all acts, deeds and things lawfully done by our said attorney pursuant to this Power of Attorney and that all acts, deeds and things done by our aforesaid attorney shall and shall always be deemed to have been done by us.

All the terms used herein but not defined shall have the meaning ascribed to such terms under the RFP.

For ……. [Insert name of the Bidder on whose behalf PoA is executed]

……..
(Signature)

Name: …….
Designation: …….

Accepted

……..……
(Signature of the Attorney)

Name: …….
Designation: ...……..
Address: .....
.....
(Name, Designation and Address of the Attorney)

Specimen signatures of attorney attested by the Executant

……
(Signature of the Executant)

……..
(Signature of Notary Public)

Place: ……
Date: ……

Notes:

1) To be executed by Bidding Company or the Lead Member, in the case of a Bidding Consortium, as the case maybe.

2) The mode of execution of the Power of Attorney should be in accordance with the procedure, if any, laid down by the applicable law and the charter documents of the executant(s) and when it is so required, the same should be under common seal of the executant affixed in accordance with the applicable procedure. Further, the person whose signatures are to be provided on the power of attorney shall be duly authorized by the executant(s) in this regard.

3) Also, wherever required, the executant(s) should submit for verification the extract of the charter documents and documents such as a Board resolution / power of attorney, in favour of the Person executing this power of attorney for delegation of power hereunder on behalf of the executant(s).

4) In case of foreign Bidders, refer to clause 2.5.6 (p)

ANNEXURE 4 - FORMAT FOR POWER OF ATTORNEY TO BE PROVIDED BY EACH OF THE OTHER MEMBERS OF THE CONSORTIUM IN FAVOUR OF THE LEAD MEMBER

POWER OF ATTORNEY

(To be on non-judicial stamp paper of appropriate value as per Stamp Act relevant to place of execution. Foreign companies submitting bids are required to follow the applicable law in their country)

KNOW ALL MEN BY THESE PRESENTS THAT M/s…….……., having its registered office at ……..……., …..,..…and M/s ……..…. having its registered office at …….….. , (Insert names and registered offices of all Members of the Consortium), the Members of Consortium, have formed a Bidding Consortium named ……. (insert name of the Consortium) (hereinafter called the **"Consortium"**) vide Consortium Agreement dated…….…….. and having agreed to appoint M/s……..… as the Lead Member of the said Consortium do hereby constitute, nominate and appoint M/s…….……..a company incorporated under the laws of …….……and having its Registered / Head Office at ……..…….as our duly constituted lawful Attorney (hereinafter called as **"Lead Member"**) which is one of the Members of the Consortium, to act as the Lead Member and our true and lawful attorney, to do in our name and on our behalf, all such acts, deeds and things necessary in connection with or incidental to submission of Consortium's Bid for the Project, including signing and submission of the Bid and all documents related to the Bid, including, undertakings, letters, certificates, acceptances, clarifications, guarantees, etc, making representations to the BPC, and providing information / responses to the BPC, representing us and the Consortium in all matters before the BPC, and generally dealing with the BPC in all matters in connection with our Bid for the said Project, till completion of the bidding process in accordance with the RFP and signing of the Share Purchase Agreement by all the parties thereto.

It is expressly understood that in the event of the Consortium being selected as Successful Bidder, this Power of Attorney shall remain valid, binding and irrevocable until the Bidding Consortium achieves execution of all RFP Project Documents.

We, as the Member of the Consortium, agree and undertake to ratify and confirm all whatsoever the said Attorney/Lead Member has done on behalf of the Consortium Members pursuant to this Power of Attorney and the same shall bind us and deemed to have been done by us.

All the terms used herein but not defined shall have the meaning ascribed to such terms under the RFP.

IN WITNESS WHEREOF M/s …….……., as the Member of the Consortium have executed these presents on this…….. day of .....

For and on behalf of
Consortium Member

…….

(Signature of the Authorized Signatory)

Name: ……
Designation: ..……....
Place: ……
Date: ……..

Name: ……
Designation: ..……....
Place: ……
Date: ……..

Accepted
Specimen signatures of attorney attested

…….
(Signature)

……

……

(Signature of Notary Public)
……

(Name, Designation and Address of the Attorney)

Place: ……
Date: …….

Notes:

1. The mode of execution of the power of attorney should be in accordance with the procedure, if any, laid down by the applicable law and the charter documents of the executant(s) and when it is so required, the same should be under common seal of the executant affixed in accordance with the applicable procedure. Further, the person whose signatures are to be provided on the power of attorney shall be duly authorized by the executant(s) in this regard.

2. Also, wherever required, the executant(s) should submit for verification the extract of the charter documents and documents such as a Board resolution / power of attorney, in favour of the Person executing this power of attorney for delegation of power hereunder on behalf of the executant(s).

3. In case of foreign Bidders, refer to clause 2.5.6 (p)

ANNEXURE 5 - FORMAT FOR BIDDER'S COMPOSITION AND OWNERSHIP STRUCTURE

1. Corporate Details:

Please provide the following information for the Bidder. If the Bidder is a Consortium, please provide this information for each Member including the Lead Member:

a. Company's Name, Address, and Nationality:

Name: ……

Address: ……
……
……

Website Address: ……..

Country of Origin: ……

b. Year Organized: ……..

c. Company's Business Activities: …….
.....

d. Status as a Bidder:

i. Bidding Company
ii. Lead Member of the Bidding Consortium
iii. Member of the Bidding Consortium

Note: tick the applicable serial number

e. Company's Local Address in India (if applicable):

…….
…….
…….

f. Name of the Authorized Signatory: .....

g. Telephone Number: …….

h. Email Address: …….

i. Telefax Number: …….

j. Please provide the following documents:

i. Copy of the Memorandum and Articles of Association and certificate of incorporation or other equivalent organizational document (as applicable), including their amendments, certified by the Company Secretary as

Attachment 1 for Bidding Company / each Member of Bidding Consortium including Lead Member.

ii. Authority letter (as per format for authorization given below) in favour of BPC from the Bidder/every Member of the Consortium authorizing BPC to seek reference from their respective bankers & others as **Attachment 2** as per Clause 2.1.6 of the RFP.

2. Details of Ownership Structure:

Equity holding of Bidding Company/ each Member of Bidding Consortium including Lead Member owning 10% or more of total paid up equity.

Name of the Bidding Company / Consortium Member: …….
Status of equity holding as on ……

Name of the Equity Holder	Type and No. of Shares owned	Extent of Voting Control (%)
1.		
2.		
3.		
4.		
5.		
6.		
7.		
8.		
....		

Notes:

1. The above table is to be filled in separately for each Consortium Member.
2. Status of equity holding should be provided not earlier than thirty (30) days prior to Bid Deadline.

For and on behalf of Bidding Company / Lead Member of the Bidding Consortium
M/s…….

……..
(Signature of authorized representative)
Name: ……..
Designation: ……

……..
(Stamp)

Date: ……
Place: ……

FORMAT FOR AUTHORISATION

(In case of Bidding Consortium, to be given separately by each Member)
(On Non – judicial stamp paper duly attested by notary public. Foreign companies submitting bids are required to follow the applicable law in their country)

The undersigned hereby authorize(s) and request(s) all our Bankers, including its subsidiaries and branches, any person, firm, corporation or authority to furnish pertinent information deemed necessary and requested by **_____[Name of BPC]** to verify our Bid for selection of Bidder as Transmission Service Provider for "**Establishment of 400/220/132 kV AIS Sakoli (Dist. Bhandara)"** through tariff based competitive bidding process or regarding our project development experience, financial standing and general reputation.

For and on behalf of M/s……. (Insert Name of Bidding Company or Member of the Consortium)

.....
(Signature)

Name of Authorized Signatory: …….

(Signature and Name of the authorized signatory of the Company)

Place: ……
Date: ……

……..
(Company rubber stamp/seal)

…….
(Signature of Notary Public)

Place: ……
Date: ……

ANNEXURE 6 - FORMAT FOR CONSORTIUM AGREEMENT

(To be on non-judicial stamp paper of appropriate value as per Stamp Act relevant to place of execution. Foreign companies submitting bids are required to follow the applicable law in their country)

THIS CONSORTIUM AGREEMENT executed on this..... day of .....Two thousand.....between M/s....., a company incorporated under the laws of ..... and having its Registered Office at ..... (hereinafter called the "Party 1", which expression shall include its successors, executors and permitted assigns) and M/s.....a Company incorporated under the laws of ..... and having its Registered Office at ..... (hereinafter called the "Party n", which expression shall include its successors, executors and permitted assigns) and for the purpose of submitting the Bid, acquisition of **{Name of the SPV Company or "Project specific SPV to be incorporated by the BPC"}**(in case of award) and entering into other Agreement(s) as specified in the RFP (hereinafter referred to as "Agreements") as may be entered into with the **Maharashtra State Transmission Utility (STU)**

WHEREAS, the BPC had invited Bid in response to RFP issued to …… (insert the name of purchaser of RFP) for selection of the bidder as the Transmission Service Provider to establish Intra-State Transmission System for **"Establishment of 400/220/132 kV AIS Sakoli (Dist. Bhandara)"**.

AND WHEREAS, Clause 2.2.4 of the RFP document stipulates that the Bidders qualifying on the strength of a Bidding Consortium will have to submit a legally enforceable Consortium Agreement in a format specified in the RFP document wherein the Consortium Members have to commit equity of a specific percentage in the Project.

AND WHEREAS, Clause 2.2.4 of the RFP document also stipulates that the Bidding Consortium shall provide along with the Bid, a Consortium Agreement as per prescribed format whereby the Consortium Members undertake to be liable for raising the required funds for its respective equity investment commitment as specified in Consortium Agreement.

NOW THEREFORE, THIS INDENTURE WITNESSTH AS UNDER:

In consideration of the above premises and agreement all the parties in this Consortium do hereby mutually agree as follows:

1. In consideration of the selection of the Consortium as the selected bidder by the BPC, we the Members of the Consortium and parties to the Consortium Agreement do hereby unequivocally agree that M/s..... (Insert name of the Lead Member), shall act as the Lead Member as defined in the RFP for self and agent for and on behalf of ……., ..., ..., ... (the names of all the other Members of the Consortium to be filled in here).

2. The Lead Member is hereby authorized by the Members of Consortium and parties to the Consortium Agreement to bind the Consortium and receive instructions for and on behalf of the Members.

3. Notwithstanding anything contrary contained in this Consortium Agreement, the Lead Member shall always be liable for the equity investment obligations of all the Consortium Members, i.e., for both its own equity contribution as well as the equity contribution of other Members.

4. The Lead Member shall be liable and responsible for ensuring the individual and collective commitment of each of the Members of the Consortium in discharging all their respective equity obligations. Each Consortium Member further undertakes to be individually liable for the performance of its part of the obligations without in any way limiting the scope of collective liability envisaged in this agreement.

5. Subject to the terms of this agreement, the share of each Member of the Consortium in the "issued equity share capital of the project company" shall be in the following proportion: (if applicable)

Name	Percentage of equity holding in the Project
Party 1	……..
……..	……..
Party n	……..
Total	**100%**

[**Note:** The percentage equity holding for any Consortium Member in the Project cannot be zero in the above table]

6. The Lead Member shall inter alia undertake full responsibility for liaising with lenders and mobilizing debt resources for the Project and achieving financial closure.

7. In case of any breach of any of the equity investment commitment by any of the Consortium Members, the Lead Member shall be liable for the consequences thereof.

8. Except as specified in the Agreement, it is agreed that sharing of responsibilities as aforesaid and equity investment obligations thereto shall not in any way be a limitation of responsibility of the Lead Member under these presents.

9. It is further specifically agreed that the financial liability for equity contribution of Lead Member shall, not be limited in any way so as to restrict or limit its liabilities. The Lead Member shall be liable irrespective of their scope of work or financial commitments.

10. It is expressly understood and agreed between the Members that the responsibilities and obligations of each of the Members shall be as delineated as annexed hereto as **Appendix-I,** forming integral part of this Agreement. It is further agreed by the Members that the above sharing of responsibilities and obligations shall not in any way be a limitation of joint and several responsibilities and liabilities of the Members, with regards to all matters relating to the Project.

11. It is clearly agreed that the Lead Member shall ensure performance under the Agreements and if one or more Consortium Members fail to perform its /their respective obligations

under the Agreement(s), the same shall be deemed to be a default by all the Consortium Members.

12. This Consortium Agreement shall be construed and interpreted in accordance with the Laws of India and courts at Delhi alone shall have the exclusive jurisdiction in all matters relating thereto and arising there under.

13. It is hereby agreed that, the Lead Member shall furnish the bid bond, as stipulated in the RFP, on behalf of the Consortium Members.

14. It is hereby agreed that in case of selection of Bidding Consortium as the selected bidder, the parties to this Consortium Agreement do hereby agree that they shall furnish the contract performance guarantee on behalf of the TSP in favor of the Maharashtra State Transmission Utility (STU), as stipulated in the RFP and Transmission Service Agreement.

15. It is further expressly agreed that the Consortium Agreement shall be irrevocable and shall form an integral part of the RFP Project Document and shall remain valid till the execution of the Share Purchase Agreement, unless expressly agreed to the contrary by the Maharashtra State Transmission Utility (STU). Over the term of the Transmission Service Agreement, the provisions of TSA and MERC Regulations as amended from time to time shall apply on the Consortium Members.

16. The Lead Member is authorized and shall be fully responsible for the accuracy and veracity of the representations and information submitted by the Consortium Members respectively from time to time in response to the RFP and for the purposes of the Project.

17. It is hereby expressly agreed between the parties to this Consortium Agreement that neither party shall assign or delegate its rights, duties or obligations under this Agreement except with the prior written consent of the Maharashtra State Transmission Utility (STU).

THIS CONSORTIUM AGREEMENT:

a. has been duly executed and delivered on behalf of each party hereto and constitutes the legal, valid, binding and enforceable obligation of each such party,

b. sets forth the entire understanding of the parties hereto with respect to the subject matter hereof;

c. may not be amended or modified except in writing signed by each of the parties and with prior written consent of the Maharashtra State Transmission Utility (STU).

IN WITNESS WHEREOF, the parties to the Consortium Agreement have, through their authorized representatives, executed these present on the Day, Month and Year first mentioned above.

For and on behalf of Consortium Member 1 (Party 1)
M/s…….

.....
(Signature of authorized signatory)

Name: …….
Designation: .....…….
Place: ……..
Date: ……

For and on behalf of Consortium Member n (Party n)
M/s…….

.....
(Signature of authorized signatory)

Name: ……
Designation: .....……...
Place: …….
Date: ……...

Attested:
……..
(Signature)
(Notary Public)

Place: …….
Date: …….

Note: In case of foreign Bidders, refer to clause 2.5.6 (p)

ANNEXURE 7 A - FORMAT FOR QUALIFICATION REQUIREMENT

A. NET WORTH

To,
Chief Executive Officer,
REC Power Development and Consultancy Limited
(A wholly owned subsidiary of REC Limited)
REC Corporate Head Quarter,
D Block, Plot No. I – 4,
Sec – 29 Gurugram – 122 001

Dear Sir,

Sub: Bid for selection of Bidder as Transmission Service Provider to develop Intra-State Transmission Project i.e. "Establishment of 400/220/132 kV AIS Sakoli (Dist. Bhandara)" through tariff based competitive bidding process

1. [Note: Applicable in case of Bidding Company]

We certify that the Financially Evaluated Entity(ies) had a Networth of Rs. …… Crore or equivalent USD* computed as per instructions in this RFP based on unconsolidated audited annual accounts (refer Note-2 below) of any of the last three (3) financial years as provided in Clause 2.2.3, immediately preceding the Bid Deadline. Also, the Networth of any of the last three (3) financial years is not negative.

Name of Financially Evaluated Entity(ies)	Relationship with Bidding Company**	Financial Year	Networth (Rs. Crore)
1. ……..			
2. ……..			
3. ……..			
….			
Total Networth			

*Equivalent USD shall be calculated as per provisions of Clause 3.4.1.
** The column for "Relationship with Bidding Company" is to be filled in only in case financial capability of Parent/Affiliate has been used for meeting Qualification Requirements.

2. [Note: Applicable in case of Bidding Consortium]

We certify that the Financially Evaluated Entity(ies) had a minimum Networth of Rs. …….. Crore or equivalent USD* computed as per instructions in the RFP and based on unconsolidated audited annual accounts (refer Note-2 below) of any of the last three (3) financial years as provided in Clause 2.2.3, immediately preceding the Bid Deadline. Also, the Networth of any of the last three (3) financial years is not negative.

Name of Consortium Member	Equity Commitment in the Project (%)	Networth of Member (Rs. Crore)	Networth Requirement to be met by Member in proportion to the Equity Commitment (Rs. Crore)	Whether the Member meets the Networth Requirement
(1)	(2)	(3) (As per table below)	(4)= (2 x Total Networth requirement for the Project)	(5)
1. ……				Yes / No
2. ……				Yes / No
..				Yes / No
Total Networth for financial requirement				

Member – I (Lead Member)

[Note: Similar particulars for each Member of the Consortium is to be furnished, duly certified by the Member's Statutory Auditors]

i. Name of Member: .....

ii. Total Networth requirement: Rs …… Crore

iii. Percentage of equity commitment for the Project by the Member: ……%

iv. Networth requirement for the Member***: Rs. ……. Crore

v. Financial year considered for the Member: …….

Name of Financially Evaluated Entity(ies)	Relationship** with Member of Consortium	Financial Year	Networth (Rs. Crore)
1. …….			
2. …….			
3. …….			
Total Networth			

* Equivalent USD shall be calculated as per provisions of Clause 3.4.1;

** The column for "Relationship with Member of Consortium" is to be filled in only in case the financial capability of Parent / Affiliate has been used for meeting Qualification Requirements;

*** Networth requirement to be met by Member should be in proportion to the equity commitment of the Member for the Project.

Yours faithfully

……
(Signature and name of the authorized signatory of the Company and Stamp)

Name: …….
Date: …….
Place: …….

……
(Signature and Stamp of statutory Auditors of Bidding Company / each Member of Consortium)

Name: …….
Date: …….
Place: …….

Date: …….

Notes:

1. Along with the above format, in a separate sheet, please provide details of computation of Networth of last three (3) financial years duly certified by Statutory Auditor.

2. Audited consolidated annual accounts of the Bidder may be used for the purpose of financial criteria provided the Bidder has at least 26% equity in each company whose accounts are merged in the audited consolidated accounts and provided further that the financial capability of such companies (of which accounts are being merged in the consolidated accounts) shall not be considered again for the purpose of evaluation of the Bid.

3. In case Bidder or a Member of Consortium takes recourse to its Parent/Affiliate for meeting technical / financial requirements, then the financial years considered for such purpose should be same for the Bidder / Member of Consortium and their respective Parent / Affiliate.

ANNEXURE 7B - FORMAT FOR TECHNICAL REQUIREMENT

To,

Chief Executive Officer,
REC Power Development and Consultancy Limited
(A wholly owned subsidiary of REC Limited)
REC Corporate Head Quarter,
D Block, Plot No. I – 4,
Sec – 29 Gurugram – 122 001

Dear Sir,

Sub: Bid for selection of Bidder as Transmission Service Provider to develop Intra-State Transmission Project i.e. "Establishment of 400/220/132 kV AIS Sakoli (Dist. Bhandara)" through tariff based competitive bidding process

1. To be used by Bidder using the development experience in infrastructure sector

We certify that M/s. …….. (Insert name of Technically Evaluated Entity(ies)) have experience of development of projects in the Infrastructure sector in the last five (5) years whose aggregate capital expenditure is Rs. ……. Crore or equivalent USD*. We further certify that the capital expenditure of any single project considered for meeting the technical Qualification Requirement is not less than Rs. …… Crore or equivalent USD*. For this purpose, capital expenditure incurred on projects which have been either wholly completed / commissioned or partly completed projects put under commercial operation and for which operation has commenced till at least seven (7) days prior to the Bid Deadline has been considered.

The project(s) considered for the purpose of technical experience (as per table given below) have been executed and owned to the extent as indicated in the table below (to be atleast twenty – six percent (26%)) by the Bidding Company / Lead Member of the Consortium / our Parent / our Affiliate(s) [strike off whichever is not applicable] on operation of the projects.

This technical requirement has been calculated as per the instructions provided in the RFP on the basis of following projects:

Name of Company (which has executed the project at (3)) whose technical capability has been used for Qualification Requirement	Relationship** with Bidding Company / Lead Member	Project name	Nature of Project (BOOT, BOT, BOOM, DBFOT etc.)	Relevant Infrastructure sector	Date of Financial Closure of the Project (in DD / MM / YYYY)	Date of Completion / Commissioning / Commercial Operation of partly completed projects	Project cost (Rs. Crore)	Percentage Equity Holding of Company at (1) in Completed project(s)
(1)	(2)	(3)	(4)	(5)	(6)	(7)	(8)	(9)
……		……. (Project 1)						
……		…….						

Name of Company (which has executed the project at (3)) whose technical capability has been used for Qualification Requirement	Relationship** with Bidding Company / Lead Member	Project name	Nature of Project (BOOT, BOT, BOOM, DBFOT etc.)	Relevant Infrastructure sector	Date of Financial Closure of the Project (in DD / MM / YYYY)	Date of Completion / Commissioning / Commercial Operation of partly completed projects	Project cost (Rs. Crore)	Percentage Equity Holding of Company at (1) in Completed project(s)
(1)	(2)	(3)	(4)	(5)	(6)	(7)	(8)	(9)
Total (Rs. Crore)								

* Equivalent USD shall be calculated as per provisions of Clause ____

** The column for "Relationship with Bidding Company / Lead Member" is to be filled in only in case technical capability of Parent/Affiliate has been used for meeting Qualification Requirements.

We further certify that the Company(ies) as indicated in column (1) of the above table, whose technical capability has / have been used for meeting the qualification requirement, has / have held shareholding respectively of atleast twenty – six percent (26%)from the date of financial closure till the date of commissioning / completion of the above project(s).

2. To be used by Bidder using construction experience in infrastructure sector.

We certify that M/s. …….. (Insert name of Technically Evaluated Entity(ies)) have received aggregate payments not less than Rs. ……. Crore or equivalent USD (calculated as per provisions in Clause 3.4.1) from its client(s) for construction works fully completed during the last 5(five) financial years. We further certify that the payment received from each project shall not be less than Rs. ……. Crore or equivalent USD (calculated as per provisions in Clause 3.4.1). For this purpose, payments received on projects that have been commissioned/completed at least seven (7) days prior to the Bid Deadline shall be considered. Further only the payments (gross) actually received, during such 5 (five) financial years shall qualify for purposes of computing the technical capacity.

We also confirm that construction works does not include cost of land supply of goods or equipment except when such goods or equipment form part of a turn-key construction contract/ EPC contract for the project.

This technical requirement has been calculated as per the instructions provided in the RFP on the basis of following projects:

Name of Company (which has executed the project at (3)) whose technical capability has been used for	Relationship** with Bidding Company / Lead Member	Project name	Nature of Project (EPC, Turnkey etc)	Relevant Infrastructure sector	Date of award of contract (in dd/mm/yy)	Date of Completion / Commissioning	Payment received (Rs. Crore)

Qualification Requirement							
(1)	(2)	(3)	(4)	(5)	(6)	(7)	(8)
……		……. Project 1					
……		…….					
……		…….					
	Total (Rs. Crore)						

Yours faithfully

……..
(Signature and name of the authorized signatory of the Company and stamp)

Name: ……..
Date: ……..
Place: ……..

…….
(Signature and Stamp of statutory Auditors of Bidding Company/ Lead Member of Consortium)
Name: ……..
Date: ……..
Place: ……..

Date: …….

Notes:

1. Along with the above format, in a separate sheet, please provide details of computation of capital expenditure of projects duly certified by Statutory Auditor of the project company. In addition, the Statutory Auditor of the project company should also certify that the capital expenditure of projects commissioned or completed 7 days prior to Bid Deadline has been capitalized in the books of accounts.

   Additionally, in case construction experience is used, a certificate(s) from the statutory auditors stating the payments received and the concerned client(s) stating the works commissioned during the past 5 years in respect of the projects specified above. In case a particular job/ contract has been jointly executed by the Bidder (as part of a consortium), it should further support its claim for the share in work done for that particular job/ contract by producing a certificate from its statutory auditor or the client.

2. In case the accounts for the financial year in which the project claimed for meeting qualification requirement has been commissioned are not audited, the Bidder shall give declaration in this regard duly certified by its statutory auditor. In such a case,

Bidder shall provide details of computation of capital expenditure of such project(s) duly certified by Statutory Auditor of the project company and the Statutory Auditor of the project company should also certify that the capital expenditure of projects commissioned or completed shall be capitalized in the books of accounts upon finalization.

3. The unconsolidated audited annual accounts of both the TEE and the Bidding Company / Lead Member for the respective financial years (financial years in which financial closure was achieved to the financial year in which the said project was completed / commissioned) should be submitted.

ANNEXURE 7C - FORMAT FOR TECHNICAL & FINANCIAL REQUIREMENT – RELATIONSHIP & DETAILS OF EQUITY SHAREHOLDING

[To be filled by Bidding Company / each Member of the Bidding Consortium including Lead Member if credentials of Parent and / or Affiliates have been used by them]

To,

Chief Executive Officer,
REC Power Development and Consultancy Limited
(A wholly owned subsidiary of REC Limited)
REC Corporate Head Quarter,
D Block, Plot No. I – 4,
Sec – 29 Gurugram – 122 001

Dear Sir,

Sub: Bid for selection of Bidder as Transmission Service Provider to establish Intra-State Transmission Project i.e. "Establishment of 400/220/132 kV AIS Sakoli (Dist. Bhandara)" through tariff based competitive bidding process

We certify that M/s. ……. (insert name of the **Bidding Company / Consortium Members**) have considered the technical and financial capability of its Parent and / or Affiliates, for the purpose of meeting Qualification Requirements as per the instructions provided in the RFP. The name of Parent and / or Affiliate, nature of relationship(s) with such Parent and / or Affiliate and details of equity holding are as follows:

Name of Company whose credentials considered	Type of credentials considered (technical and / or financial)	Relationship with Bidding Company / Consortium Member (Parent / Affiliate)	Details of equity shareholding (refer notes below)
Company 1			
…….			
…….			
…….			
……..			

NOTES:

i. In case of Parent, the equity holding of the Parent in the Bidding Company / Member of the Bidding Consortium, including the Lead Member of the Consortium, need to be specified.

ii. In case of Affiliate under direct control of Bidder, the equity holding of the Bidding Company / Member of the Bidding Consortium, including the Lead Member of the Consortium in the Affiliate, needs to be specified.

iii. In case of Affiliate under common control of Parent, the equity holding of the Parent in the Affiliate of the Bidding Company / Member of the Bidding Consortium, including the Lead Member of the Consortium, needs to be specified.

iv. Relationship of Parent / Affiliate with Bidding Company / Member of Consortium to be at the most seven (7) days prior to the Bid Deadline (as per Clause 2.1.4 of RFP)

Yours faithfully

……

(Signature and name of the authorized signatory of the Company and stamp)

Name: ……

Date: ……

Place: ……

……

(Signature and Stamp of statutory Auditors of Bidding Company / each Member of Bidding Consortium)

Name: ……..

Date: ……..

Place: ……..

Date: ……..

ANNEXURE 7D - ADDITIONAL INFORMATION FOR VERIFICATION OF FINANCIAL AND TECHNICAL CAPABILITIES OF BIDDERS.

…….…….
(Name of Bidder (Bidding Company/ Bidding Consortium or Technically/Financially Evaluated Entity(ies))

(Note: In case of Consortium, details to be filled in by Lead Member for each Member of the Consortium including the Lead Member and in case of the qualification requirements of Technically / Financially Evaluated Entity(ies) being used, to be filled by each of such entity(ies)

i. Financial capability (Attachment 1):

1. Bidders shall attach unconsolidated / consolidated audited annual accounts, statements, as the case may be, (refer Clause 2.1.3) for the last three (3) financial years as Attachment 1. Such unconsolidated audited annual accounts shall include a Balance Sheet, Profit and Loss Account, Auditors Report and profit appropriation account.

ii. Technical capability (Attachment 2):

a. This attachment shall include details of projects completed/commissioned or partly completed projects for which commercial operation has commenced to be considered for the purpose of meeting Qualification Requirements.

1. To be used by Bidder using development experience in infrastructure sector

Particulars	Year 1	Year 2	Year 3	Year 4	Year 5
Name(s) of project(s) from Infrastructure sectors					
Location(s) including country(s) where project was set up					
Nature of Project					
Voltage level (if any)					
Capital cost of project(s) Rs. in Crore					
*Status of the project					
% of equity owned in the project(s)					

***Note 1:** Date of completion/commissioning/commercial operation to be mentioned

Note 2: For each project listed in the table, the Bidder shall furnish an executive summary including the following information:

- Project model, i.e., BOO, BOOT, BOOM;

- Debt financing and equity raised and provided by Bidder/Bidder's Parent/Bidder's Affiliate for the project, including names of lenders and investors;
- Size and type of installation;
- Technical data/information on major equipment installed
- Description of role performed by the Bidder/Bidder's Parent/Bidder's Affiliate on the project
- Clearances taken by the Bidder/Bidder's Parent/Bidder's Affiliate including but limited to right-of-way (RoW), forest clearance and other statutory / Govt. clearances.
- Cost data (breakdown of major components)
- Name of EPC and/or other major contractor
- Construction time for the project
- Names, addresses and contact numbers of owners of the projects
- Operating reliability over the past five (5) years or since date of commercial operation
- Operating environmental compliance history
- Names of supervisory entities or consultant, if any
- Date of commercial operation
- Total duration of operation

2. To be used by Bidder using construction experience in infrastructure sector

Particulars	Year 1	Year 2	Year 3	Year 4	Year 5
Name(s) of project(s) from Infrastructure sectors					
Location(s) including country(s) where project was set up					
Nature of Project					
Voltage level (if any)					
Revenue received Rs. in Crore					
*Status of the project					
% of equity owned in the project(s)					

***Note 1:** Date of completion/commissioning/commercial operation to be mentioned

Note 2: For each project listed in the table, the Bidder shall furnish an executive summary including the following information:

- Project model, i.e., EPC, Turnkey;
- Size and type of installation;
- Technical data/information on major equipment installed
- Description of role performed by the Bidder/Bidder's Parent/Bidder's Affiliate on the project
- Cost data (breakdown of major components)
- Name of sub-contractor
- Construction time for the project
- Names, addresses and contact numbers of owners of the projects

- Operating reliability over the past five (5) years or since date of commercial operation
- Operating environmental compliance history
- Names of supervisory entities or consultant, if any
- Date of commercial operation
- Total duration of operation

iii. Attachment-3:

a. For each project listed in Attachment 2 above, certificates of final acceptance and/or certificates of good operating performance duly issued by owners for the project and the same shall be certified as true by authorized signatory of the Bidding Company or the Lead Member of Consortium). In case the project listed in Attachment 2 is under BOOT / DBFOT mechanism, the certificates of final acceptance and/or certificates of good operating performance must be issued by the authority / independent engineer of the project as defined in the respective project agreement.

For and on behalf of Bidding Company/Consortium

M/s…….

…….
(Signature of authorized signatory)

Name: ……
Designation: ……
Date: ……
Place: ……

ANNEXURE 8 -UNDERTAKING AND DETAILS OF EQUITY INVESTMENT

Format 1: Bidders' Undertakings

[On the Letter Head of the Bidding Company/Lead Member of Bidding Consortium]

Date: .....

To,

Chief Executive Officer,
REC Power Development and Consultancy Limited
(A wholly owned subsidiary of REC Limited)
REC Corporate Head Quarter,
D Block, Plot No. I – 4,
Sec – 29 Gurugram – 122 001

Dear Sir,

Sub: Bidders' Undertakings in respect of Bid for selection of Bidder as TSP to develop Intra-State Transmission Project i.e. "Establishment of 400/220/132 kV AIS Sakoli (Dist. Bhandara)".

We hereby undertake on our own behalf and on behalf of the TSP, that if selected as the Successful Bidder for the Project:

1. The Project shall comply with all the relevant electricity laws, codes, regulations, standards and Prudent Utility Practices, environment laws and relevant technical, operational and safety standards, and we shall execute any agreements that may be required to be executed as per law in this regard.

2. We confirm that the Project shall also comply with the standards and codes as per Clause 1.6.1.2 of the RFP and the TSP shall also comply with the provisions contained in the MERC (Transmission Open Access) Regulations, 2016 and as amended from time to time.

3. We give our unconditional acceptance to the RFP dated 16.12.2025 issued by the BPC and the RFP Project Documents, as amended, and undertake to ensure that the TSP shall execute all the RFP Project Documents, as per the provisions of this RFP.

4. We have submitted the Bid on the terms and conditions contained in the RFP and the RFP Project Documents. Further, the Financial Bid submitted by us is strictly as per the format provided in Annexure 21 of the RFP, without mentioning any deviations, conditions, assumptions or notes in the said Annexure.

5. Our Bid is valid up to the period required under Clause 2.8 of the RFP.

6. Our Bid has been duly signed by authorized signatory and stamped in the manner and to the extent indicated in this RFP and the power of attorney / Board resolution in requisite format as per RFP has been enclosed with this undertaking.

7. We have assumed that if we are selected as the Successful Bidder, the provisions of the Consortium Agreement, to the extent and only in relation to equity lock in and our liability thereof shall get modified to give effect to the provisions of Clause 2.5.8 of this RFP and Article 18.1 of the Transmission Service Agreement. ***(Note:*** *This is applicable only in case of a Bidding Consortium)*

8. We confirm that our Bid meets the Scheduled COD of each transmission Element and the Project as specified below:

S. No.	Name of the Transmission Element	Scheduled COD in months from Effective Date	Percentage of Quoted Transmission Charges recoverable on Scheduled COD of the Element of the Project	Element(s) which are pre-required for declaring the commercial operation (COD) of the respective Element
1.	Establishment of AIS Sakoli with 2 x 500 MVA, 400/220 kV ICTs & 2 x 315 MVA, 400/132 kV ICTs with 1 x 125 MVAr Bus Reactor at 400 kV level. • 400 / 220 kV, 500 MVA, ICTs – 02 Nos. • 400 / 132 kV, 315 MVA, ICTs – 02 Nos. • 400 kV ICT Bays – 04 Nos. • 220 kV ICT Bays – 02 Nos. • 132 kV ICT Bays – 02 Nos. • 400 kV Line Bays – 04 Nos. • 220 kV Line Bays – 02 Nos. • 132 kV Line Bays – 06 Nos. • 220 kV Transfer Bus Coupler- 1 set • 220 kV Bus Coupler-1 No. • 132 kV Bus Coupler-1 No. • 132 kV Transfer Bus Coupler- 1 set	24 months from Effective Date	100%	All Elements are required to be commissioned simultaneously as their utilization is dependent on commissioning of each other.

S. No.	Name of the Transmission Element	Scheduled COD in months from Effective Date	Percentage of Quoted Transmission Charges recoverable on Scheduled COD of the Element of the Project	Element(s) which are pre-required for declaring the commercial operation (COD) of the respective Element
	Future Space Provisions: • 400/132 kV, 315 MVA, ICT-01 No. • 400 kV ICT Bay-1 No. • 132 kV ICT Bay-1 No.			
2.	LILO of Both circuit of 400 kV Wardha (PG)- Raipur (PG) 400 kV D/C line at 400 kV AIS Sakoli (New)			
3.	220 kV D/C line from 400 kV AIS Sakoli (New) to 220 kV Bhandara (existing) • 220 kV line end bays at 220 kV Bhandara (existing)-02 Nos.			
4.	132 kV D/C line from 400 kV AIS Sakoli (New) to 132 kV Deori (proposed) • 132 kV line end bays at 132 kV Deori (proposed)-02 Nos.			
5.	132 kV D/C line from 400 kV AIS Sakoli (New) to 132 kV Sakoli (existing) • 132 kV line end bays at 132 kV Sakoli (existing)-02 Nos.			
6.	132 kV D/C line from 400 kV AIS Sakoli (New) to132 kV Morgaon Arjuni (existing) • 132 kV line end bays at 132 kV Morgaon Arjuni (existing) -02 Nos.			
Note-				

S. No.	Name of the Transmission Element	Scheduled COD in months from Effective Date	Percentage of Quoted Transmission Charges recoverable on Scheduled COD of the Element of the Project	Element(s) which are pre-required for declaring the commercial operation (COD) of the respective Element
Space for 220 kV line bay at Bhandara (Existing), 132 kV line end bays at 132 kV Deori, 132 kV line end bays at 132 kV Moregaon Arjuni (Existing) and 132 kV line end bays at 132 kV Sakoli (Existing) shall be provided by existing Utility. However in case of land constraints TSP may opt for GIS bays or acquire suitable land adjacent to the substations. *In case of LILO lines the technical specifications of Conductor and OPGW should be matching with existing line parameters.*				

We agree that the payment of Transmission Charges for any Element irrespective of its successful commissioning on or before its Scheduled COD shall only be considered after the successful commissioning of Element(s) which are pre - required for declaring the commercial operation of such Element as mentioned in the above table.

Scheduled COD for the Project: 24 Months from Effective Date

9. We confirm that our Financial Bid conforms to all the conditions mentioned in this RFP, and in particular, we confirm that:
   a. Financial Bid in the prescribed format of Annexure 21 has been submitted duly signed by the authorized signatory.
   b. Financial Bid is unconditional.
   c. Only one Financial Bid has been submitted.

10. We have neither made any statement nor provided any information in this Bid, which to the best of our knowledge is materially inaccurate or misleading. Further, all the confirmations, declarations and representations made in our Bid are true and accurate. In case this is found to be incorrect after our acquisition of Sakoli Power Transmission Limited, pursuant to our selection as Selected Bidder, we agree that the same would be treated as a TSP's Event of Default under Transmission Service Agreement, and relevant provisions of Transmission Service Agreement shall apply.

11. We confirm that there are no litigations or other disputes against us which materially affect our ability to fulfill our obligations with regard to the Project as per the terms of RFP Project Documents.

12. Power of attorney/ Board resolution as per Clause 2.5.2 is enclosed.

Signature and name of the authorized signatory of the Company and stamp of Bidding Company or Lead member of Consortium

Note:

1. In case of foreign Bidders, refer to clause 2.5.6 (p)

Format 2: Details of equity investment in Project

1.1.a Name of the Bidding Company/ Bidding Consortium:

1.1.b Name of the Lead Member in the case of a Bidding Consortium:

1.2 Investment details of the Bidding Company/Member of the Bidding Consortium investing in Sakoli Power Transmission Limited as per Clause 2.5.8.2.

S. No.	Name of the Bidding Company/ Member in case of a Bidding Consortium	Name of the Company investing in the equity of the _____[Name of SPV]	Relationship with Bidding Company /Member of the Bidding Consortium	% of equity participation in the _____[Name of SPV]
(1)	(2)	(3)	(4)	(5)
TOTAL				100%

* In case the Bidder proposes to invest through its Affiliate(s) / Parent Company / Ultimate Parent Company, the Bidder shall declare shareholding pattern of such Affiliate(s) / Parent Company / Ultimate Parent Company and provide documentary evidence to demonstrate relationship between the Bidder and the Affiliate(s) / Parent Company / Ultimate Parent Company. These documentary evidences could be, but not limited to, demat account statement(s) / Registrar of Companies' (ROC) certification / share registry book, etc duly certified by Company Secretary.

Members of the Consortium or the Bidding Company making investment in the equity of the Sakoli Power Transmission Limited themselves to fill in their own names in the column (3)

Signature and Name of authorized signatory in whose name power of attorney has been issued

Signature of authorized signatory

Name: …….

Designation: ……...

Date…….

Company rubber stamp

ANNEXURE 9 -AUTHORISATION FROM PARENT / AFFILIATE OF BIDDING COMPANY / MEMBER OF BIDDING CONSORTIUM WHOSE TECHNICAL / FINANCIAL CAPABILITY HAS BEEN USED BY THE BIDDING COMPANY / MEMBER OF BIDDING CONSORTIUM.

[On the Letter Head of the Parent /Affiliate]

Name: …….
Full Address: …….
Telephone No.: ……...
E-mail address: ……...
Fax / No.: ……

To

Chief Executive Officer,
REC Power Development and Consultancy Limited
(A wholly owned subsidiary of REC Limited)
REC Corporate Head Quarter,
D Block, Plot No. I – 4,
Sec – 29 Gurugram – 122 001

Dear Sir,

Sub: Authorization for use of Technical / Financial Capability of M/s……. (Insert name of Parent / Affiliate) by M/s …….. (Insert name of Bidding Company / Member of Bidding Consortium).

We refer to the RFP dated 16.12.2025 ('RFP') issued by you for selection of Bidder as Transmission Service Provider for "**Establishment of 400/220/132 kV AIS Sakoli (Dist. Bhandara)**".

We confirm that M/s. ……. (Insert name of Bidding Company/ Consortium Member) has been authorized by us to use our technical and/or financial capability [strikeout whichever is not applicable] for meeting the Qualification Requirements for "**Establishment of 400/220/132 kV AIS Sakoli (Dist. Bhandara)"**.

We have carefully read and examined in detail the RFP including in particular, Clause 2.1.4 of the RFP, and we are also submitting legally binding undertaking supported by a board resolution that all the equity investment obligations of M/s…….…. (Insert Name of Bidding Company / Consortium Member), shall be deemed to be our equity investment obligations and in the event of any default the same shall be met by us. For and on behalf of M/s……. (Insert Name of Parent / Affiliate)

……
(Signature and Name of the authorized signatory of the Company and stamp)

Name: …….

Date: …….
Place: …….

Notes:

1. The above undertaking can be furnished by Ultimate Parent of Technically Evaluated Entity or Financially Evaluated Entity, as the case maybe, if legally binding undertaking is also furnished by the Ultimate Parent on behalf of such Financially Evaluated Entity/Technically Evaluated Entity.

ANNEXURE 10- FORMAT OF UNDERTAKING BY TECHNICALLY / FINANCIALLY EVALUATED ENTITY / ULTIMATE PARENT COMPANY

[On the Letter Head of the Technically / Financially Evaluated Entity / Ultimate Parent Company]

Name: …….

Full Address: ……

Telephone No.: ……

E-mail address: ……

Fax/No.: ……..

To:

Chief Executive Officer,
REC Power Development and Consultancy Limited
(A wholly owned subsidiary of REC Limited)
REC Corporate Head Quarter,
D Block, Plot No. I – 4,
Sec – 29 Gurugram – 122 001

Sub: **Undertaking for equity investment**

Dear Sir,

We refer to the Request for Proposal dated 16.12.2025 ('RFP') issued by you regarding setting up of Intra-State transmission Project i.e. "**Establishment of 400/220/132 kV AIS Sakoli (Dist. Bhandara)**" Project on build, own, operate and transfer basis.

We have carefully read and examined in detail the RFP and the RFP Project Documents, including in particular, Clause 2.1.4 of the RFP and Clauses 2.5.2 and 2.5.8 of the RFP, regarding submission of an undertaking regarding the investment in the equity share capital of Sakoli Power Transmission Limited and provisions for minimum equity holding and equity lock-in. We have also noted the amount of the equity investment required to be made in Sakoli Power Transmission Limited by the ……. [Insert the name of the Bidder or the Consortium Member] for the Project.

In view of the above, we hereby undertake to you and confirm that in the event of failure of ……[Insert the name of the Bidder or the Consortium Member] to invest in full or in part, in the equity share capital of Sakoli Power Transmission Limited as specified in the Bid, we shall invest the said amount not invested by……..[Insert the name of the Bidder or the Consortium Member] in Sakoli Power Transmission Limited by purchase of existing shares or subscribing to the new shares of Sakoli Power Transmission Limited, as stipulated by you.

We have attached hereto certified true copy of the Board resolution whereby the Board of Directors of our Company has approved issue of this Undertaking by the Company.

All the terms used herein but not defined, shall have the meaning as ascribed to the said terms under the RFP.

Certified as true.

……..

(Signature and Name of the authorized signatory of the Company and stamp)

Note:

1. Wherever required, extract of the charter documents and documents such as a Board resolution should be submitted for verification.

ANNEXURE 11 - FORMATS FOR BOARD RESOLUTIONS

Format 1
Format of the Board resolution for the Bidding Company / each Member of the Consortium / investing Affiliate / Parent Company / Ultimate Parent Company, where applicable

[Reference Clause 2.5.2 of the RFP and the illustrations in Annexure 11A]

[Note: The following resolution no.1 needs to be passed by the Boards of each of the entity/(ies) making equity investment]

The Board, after discussion, at the duly convened Meeting on …….. [Insert date], with the consent of all the Directors present and in compliance of the provisions of the Companies Act, 1956/2013, passed the following Resolution:

1. RESOLVED THAT pursuant to the provisions of the Companies Act, 1956 / Companies Act 2013 (as the case may be) and compliance thereof and as permitted under the Memorandum and Articles of Association of the company, approval of the Board be and is hereby accorded for investment of…….% (……per cent) of the total equity share capital of Sakoli Power Transmission Limited representing the entire amount proposed to be invested by the company for the transmission system for "**Establishment of 400/220/132 kV AIS Sakoli (Dist. Bhandara)**", partly by acquisition of the existing equity shares from _____[Name of BPC] and / or partly by subscribing to the new equity shares, as per the terms of the RFP.

[Note: Equity investment obligations by the Bidding Company/each Member of the Bidding Consortium/investing Affiliate or Parent or Ultimate Parent should add up to 100%.]

[Note: In the event the Bidder is a Bidding Consortium, the following Board resolution no. 2 also needs to be passed by the Lead Member of the Bidding Consortium]

2. RESOLVED THAT approval of the Board be and is hereby accorded to contribute such further amount over and above the ;……. percentage (__%) limit to the extent becoming necessary towards the total equity share in the Sakoli Power Transmission Limited, obligatory on the part of the company pursuant to the terms and conditions contained in the Consortium Agreement dated …….executed by the company as per the provisions of the RFP.

[Note: In the event, the investing entity is an Affiliate or Parent or Ultimate Parent of the Bidder, the following Board resolution no. 3 shall also be passed by the Bidder]

3. FURTHER RESOLVED THAT the Board hereby acknowledges the Board Resolution(s) passed by the…….. [Name of the Affiliate(s)/ Parent / Ultimate Parent] regarding the investment of…….(….%) of the equity share capital requirements of Sakoli Power Transmission Limited, which is to be invested by the ……[Name of the Affiliate(s)/ Parent / Ultimate Parent] for the Sakoli Power Transmission Limited, partly by acquisition of the existing equity shares from _____[Name of BPC] and partly by subscribing to the new equity shares, as per the terms of the RFP.

[Note: The following resolution no. 4 is to be provided by the Bidding Company / Lead Member of the Consortium only]

4. FURTHER RESOLVED THAT MR/MS ……..be and is hereby authorized to take all the steps required to be taken by the Company for submission of the Bid, including in particular, signing of the Bid, making changes thereto and submitting amended Bid, all the documents related to the Bid, certified copy of this Board resolution or letter or undertakings etc, required to be submitted to BPC as part of the Bid or such other documents as may be necessary in this regard.

Certified True Copy

Company rubber stamp to be affixed

[Notes:

1) This certified true copy should be submitted on the letterhead of the Company, signed by the Company Secretary or any Whole Time Director/ Manager (supported by a specific board resolution) of the Bidding Company or the Lead Member of Consortium.

2) The contents of the format may be suitably re-worded indicating the identity of the entity passing the resolution, i.e., the Bidding Company, each Member of the Bidding Consortium.

3) This format may be modified only to the limited extent required to comply with the local regulations and laws applicable to a foreign entity submitting this resolution. For example, reference to Companies Act 1956 / Companies Act 2013 (as the case may be) may be suitably modified to refer to the law applicable to the entity submitting the resolution. However, in such case, the foreign entity shall submit an unqualified opinion issued by the legal counsel of such foreign entity, stating that the Board resolutions are in compliance with the applicable laws of the respective jurisdictions of the issuing company and the authorizations granted therein are true and valid.]

Format 2

Format for the Board resolution of Technically / Financially Evaluated Entity / Ultimate Parent Company (in case credentials of such TEE/ FEE has been utilized by the Bidding Company or Bidding Consortium)

The Board, after discussion, at the duly convened Meeting on ……. [Insert date], with the consent of all the Directors present and in compliance of the provisions of the Companies Act, 1956 / 2013, passed the following Resolution:

RESOLVED THAT pursuant to the provisions of the Companies Act, 1956 / Companies Act, 2013 (as the case may be) and compliance thereof and as permitted under the Memorandum and Articles of Association of the company, approval of the Board be and is hereby accorded for issuing an Undertaking to the BPC, in the format specified in the RFP issued by the BPC, draft of which is attached hereto and initialed by the Chairman whereby the company undertakes to invest …….percent (.... %) of the total equity share capital of Sakoli Power Transmission Limited representing the entire amount proposed to be invested by ……[insert the name of the Bidder or Member] for the said Project, in case of failure of ……[Insert the name of the Bidder or Member] to make such investment".

FURTHER RESOLVED THAT .....,be and is hereby authorized to take all the steps required to be taken by the Company, including in particular, signing the said Undertaking, submitting the same to the BPC through ……[Insert name of Bidding Company/Lead Member of the Consortium] of all the related documents, certified copy of this Board resolution or letter, undertakings etc, required to be submitted to BPC as part of the Bid or such other documents as may be necessary in this regard.

Certified True Copy

Company rubber stamp to be affixed

Note:

1. This certified true copy should be submitted on the letterhead of the Company, signed by the Company Secretary or any Whole-time Director/Manager (supported by a specific board resolution) of Bidding Company or Lead Member of the Consortium.

2. The contents of the format may be suitably re-worded indicating the identity of the entity passing the resolution.

3. This format may be modified only to the limited extent required to comply with the local regulations and laws applicable to a foreign entity submitting this resolution. For example, reference to Companies Act 1956 / Companies Act 2013 (as the case may be) may be suitably modified to refer to the law applicable to the entity submitting the resolution. However, in such case, the foreign entity shall submit an unqualified opinion issued by the legal counsel of such foreign entity, stating that the Board resolutions are in compliance with the applicable laws of the respective jurisdictions of the issuing company and the authorizations granted therein are true and valid.

ANNEXURE 11A – ILLUSTRATION FOR APPLICABLE BOARD RESOLUTION REQUIREMENTS UNDER CLAUSE 2.5.2

Investor in the TSP	Entities (other than Bidder) whose credentials (financial and/or technical) used by the Bidder for meeting RFP criteria	Applicable Board Resolutions	Requirement of Undertaking (Annexure 10)
Bidder himself for 100% equity	None	a) Format 1 of Annexure 11 - Resolution: 1, 2 and 4 from the Bidder	None
Bidder himself for 100% equity	Affiliate and/or Parent Company and/or Ultimate Parent	a) Format 1 of Annexure 11 - Resolution: 1, 2, and 4 from the Bidder b) Format 2 of Annexure 11 by either Technically/ Financially Evaluated Entity(ies) whose credentials have been used, or Ultimate Parent. Provided, if the Bidder himself is the Ultimate Parent, then Format 2 need not be provided.	Yes, by either Technically / Financially Evaluated Entity(ies) Affiliate(s) whose credentials have been used, or Ultimate Parent. Provided, if the Bidder himself is the Ultimate Parent, then the undertaking need not be provided.
Bidder himself + others (Affiliate and/or Parent Company and/or Ultimate Parent) in aggregate holding 100% equity	None	a) Format 1 of Annexure 11 - Resolution: 1,2, 3 and4 from the Bidder. b) Format 1 of Annexure 11 - Resolution: 1 from the Affiliate and /or Parent and /or Ultimate Parent investing in the equity	None
Bidder himself + others (Affiliate and/or Parent Company	Affiliate and/or Parent Company and/or Ultimate Parent	a) Format 1 of Annexure 11 - Resolution: 1,2, 3 and 4 from the Bidder. b) Format 1 of Annexure 11 -	Yes, by either Parent/ Affiliate(s) whose credentials have been used, or Ultimate Parent

Investor in the TSP	Entities (other than Bidder) whose credentials (financial and/or technical) used by the Bidder for meeting RFP criteria	Applicable Board Resolutions	Requirement of Undertaking (Annexure 10)
and/or Ultimate Parent) in aggregate holding 100% equity		Resolution: 1 from the Affiliate and/or Parent and/or Ultimate Parent investing in the equity c) Format 2 of Annexure 11 by either Parent / Affiliate(s) whose credentials have been used and /or Ultimate Parent investing in the equity	

ANNEXURE 12 - FORMAT FOR ILLUSTRATION OF AFFILIATES

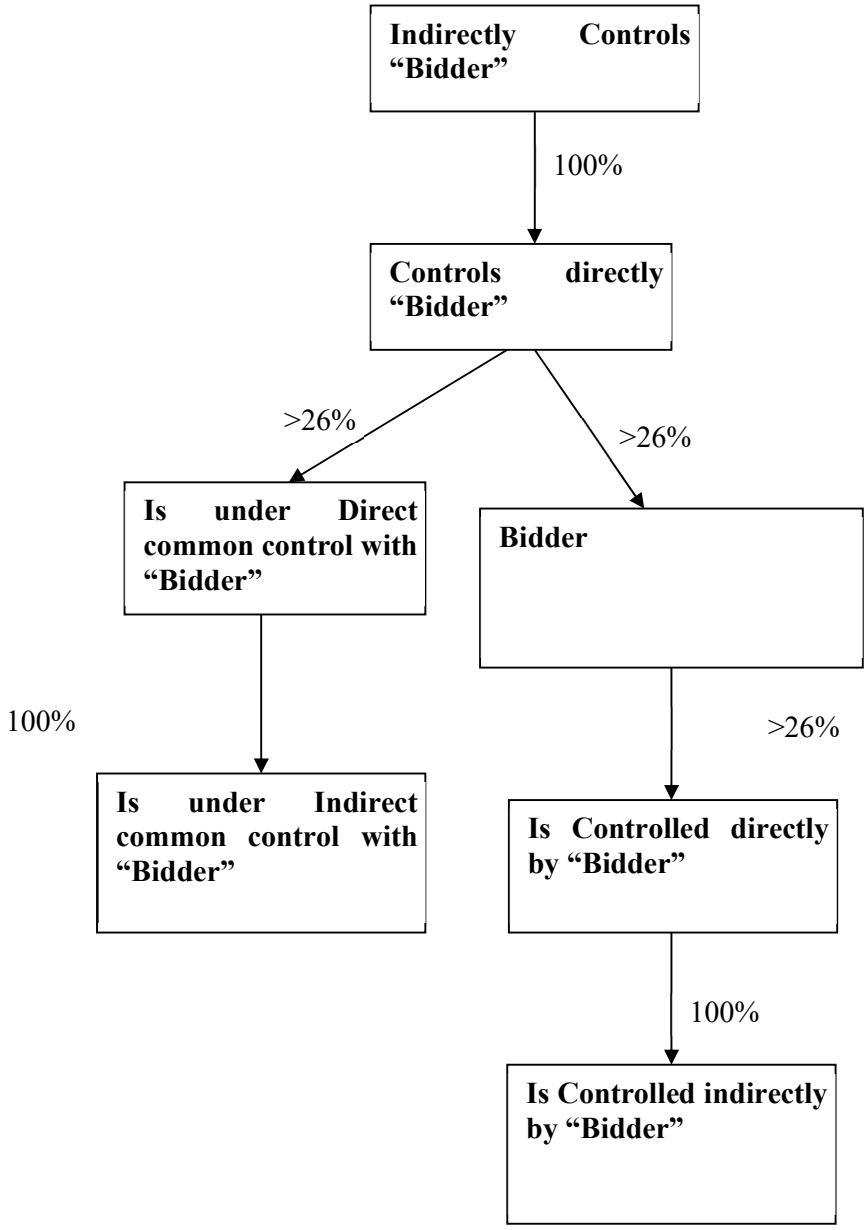

NOTE: **Bidder to provide the illustration, as applicable in their case, duly certified by the Company Secretary and supported by documentary evidence in this regard.**

ANNEXURE 13 - FORMAT FOR DISCLOSURE

[On the letter head of Bidding Company / Each Member in a Bidding Consortium]

Date: ……

DISCLOSURE

We hereby declare that the following companies with which we/ have direct or indirect relationship are also separately participating in this Bid process as per following details

S. No.	Name of the Company	Relationship
1.		
2.		
3.		

In case there is no such company please fill in the column "name of the company" as Nil.

Further we confirm that we don't have any Conflict of Interest with any other company participating in this bid process.

Certified as True

……..
(Signature)

Name: .....

Signature & Name of authorized signatory of the Company and Stamp

The above disclosure should be signed and certified as true by the authorized signatory of the Bidding Company or of the Member, in case of a Consortium).

ANNEXURE 14 - FORMAT OF THE BID BOND

FORMAT OF THE UNCONDITIONAL AND IRREVOCABLE BANK GUARANTEE FOR BID BOND

(To be on non-judicial stamp paper of appropriate value as per Stamp Act relevant to place of execution.)

In consideration of the .....[Insert name of the Bidder] submitting the Bid inter alia for establishing the Intra-State transmission Project i.e. _____[Name of Project] on build, own, operate and transfer basis, in response to the RFP dated _____ issued by _____[Name of BPC], and the Bid Process Coordinator (hereinafter referred to as BPC) agreeing to consider such Bid of …….....[Insert the name of the Bidder] as per the terms of the RFP, the [Insert name and address of the bank issuing the Bid Bond, and address of the Head Office] (hereinafter referred to as "Guarantor Bank") hereby agrees unequivocally, irrevocably and unconditionally to pay to _____[Name of BPC] or its authorized representative at _____[Address of BPC] forthwith on demand in writing from _____[Name of BPC] or any representative authorized by it in this behalf, any amount up to and not exceeding Rupees _____ Only (Rs _____ Crore),on behalf of M/s…….[Insert name of the Bidder].

This guarantee shall be valid and binding on the Guarantor Bank up to and including …… [Date to be inserted on the basis of Clause 2.11 of this RFP] and shall not be terminable by notice or any change in the constitution of the Guarantor Bank or by any other reasons whatsoever and our liability hereunder shall not be impaired or discharged by any extension of time or variations or alternations made, given, or agreed with or without our knowledge or consent, by or between concerned parties.

Our liability under this Guarantee is restricted to Rupees _____ Only (Rs ____ Crore). Our Guarantee shall remain in force until ……..[Date to be inserted on the basis of Clause 2.11 of this RFP]. _____[Name of BPC] or its authorized representative shall be entitled to invoke this Guarantee until …… [Insert Date, which is three sixty five days (365) days after the date in the preceding sentence]. The Guarantor Bank hereby expressly agrees that it shall not require any proof in addition to the written demand from _____[Name of BPC] or its authorized representative, made in any format, raised at the above mentioned address of the Guarantor Bank, in order to make the said payment to _____[Name of BPC] or its authorized representative.

The Guarantor Bank shall make payment hereunder on first demand without restriction or conditions and notwithstanding any objection, disputes, or disparities raised by the Bidder or any other person. The Guarantor Bank shall not require _____[Name of BPC] or its authorized representative to justify the invocation of this BANK GUARANTEE, nor shall the Guarantor Bank have any recourse against _____[Name of BPC] or its authorized representative in respect of any payment made hereunder.

This BANK GUARANTEE shall be interpreted in accordance with the laws of India.

The Guarantor Bank represents that this BANK GUARANTEE has been established in such form and with such content that it is fully enforceable in accordance with its terms as against the Guarantor Bank in the manner provided herein.

This BANK GUARANTEE shall not be affected in any manner by reason of merger, amalgamation, restructuring or any other change in the constitution of the Guarantor Bank.

This BANK GUARANTEE shall be a primary obligation of the Guarantor Bank and accordingly _____[Name of BPC] or its authorized representative shall not be obliged before enforcing this BANK GUARANTEE to take any action in any court or arbitral proceedings against the Bidder, to make any claim against or any demand on the Bidder or to give any notice to the Bidder to enforce any security held by _____[Name of BPC] or its authorized representative or to exercise, levy or enforce any distress, diligence or other process against the Bidder.

Notwithstanding anything contained hereinabove, our liability under this Guarantee is restricted to Rupees _____ Only (Rs ____ Crore) and it shall remain in force until …… [Date to be inserted on the basis of Clause 2.11 of RFP], with an additional claim period of three hundred sixty five (365) days thereafter. We are liable to pay the guaranteed amount or any part thereof under this BANK GUARANTEE only if _____[Name of BPC] or its authorized representative serves upon us a written claim or demand.

In witness whereof the Bank, through its authorized officer, has set its hand and stamp on this…….. day of ..... at……

Witness:

1……. Signature: ……..
Name and Address Name: ……..……..

2. …….. Designation with Stamp:
Name and Address

Signature …….

Attorney as per power of attorney

No.……

For:
…… [Insert Name of the Bank]

Banker's Stamp and Full Address:

Dated this……day of……. 20……..

Notes:

1. The Stamp Paper should be in the name of the Executing Bank.

ANNEXURE 14 A- FORMAT OF THE SURETY BOND FOR BID SECURITY FORMAT OF THE SURETY BOND

(To be on non-judicial stamp paper of appropriate value as per Stamp Act relevant to place of execution.)

In consideration of the .....[Insert name of the Bidder] submitting the Bid inter alia for establishing the Intra-State transmission system for _____[Name of Project] on build, own, operate and transfer basis, in response to the RFP dated issued by _____ [Name of BPC], and the Bid Process Coordinator (hereinafter referred to as BPC) agreeing to consider such Bid of ..... [Insert the name of the Bidder] as per the terms of the RFP, the [Insert name of Surety Insurer issuing the surety bond and address of Head Office] (hereinafter referred to as "Surety Insurer") hereby agrees unequivocally, irrevocably and unconditionally to pay to ___ [Name of BPC] or its authorized representative at ___ [Address of BPC] forthwith on demand in writing from _____ [Name of BPC] or any representative authorized by it in this behalf, any amount up to and not exceeding Rupees ___ Only (Rs _____ Crore) (the "Surety Bond"),on behalf of M/s.....[Insert name of the Bidder].

This surety bond shall be valid and binding on the Surety Insurer up to and including ..... [Date to be inserted on the basis of Clause 2.11 of this RFP] and shall not be terminable by notice or any change in the constitution of the Surety Insurer or by any other reasons whatsoever and our liability hereunder shall not be impaired or discharged by any extension of time or variations or alternations made, given, or agreed with or without our knowledge or consent, by or between concerned parties.

Our liability under this Surety Bond is restricted to Rupees _____Only (Rs ___ Crore). The Surety Bond shall remain in force until .....[Date to be inserted on the basis of Clause 2.11 of this RFP]. _____ [Name of BPC] or its authorized representative shall be entitled to invoke this Surety bond until ..... [Insert Date, which is one hundred eighty (180) days after the date in the preceding sentence]. The Surety Insurer hereby expressly agrees that it shall not require any proof except for the written demand from _____ [Name of BPC] or its authorized representative, made in any format, raised at the above mentioned address of the Surety Insurer, in order to make the said payment to ____[Name of BPC] or its authorized representative.

The Surety Insurer shall make payment hereunder on first demand without restriction or conditions and notwithstanding any objection, disputes, or disparities raised by the Bidder or any other person. The Surety Insurer shall not require _____ [Name of BPC] or its authorized representative to justify the invocation of this surety bond, nor shall the Surety Insurer have any recourse against _____ [Name of BPC] or its authorized representative in respect of any payment made hereunder.

This Surety Bond shall be interpreted in accordance with the laws of India.

The Surety Insurer represents that this Surety Bond has been established in such form and with such content that it is fully enforceable in accordance with its terms as against the Surety Insurer

in the manner provided herein.

This Surety Bond shall not be affected in any manner by reason of merger, amalgamation, restructuring, liquidation, winding up, dissolution or any other change in the constitution of the Surety Insurer.

This Surety Bond shall be a primary obligation of the Surety Insurer and accordingly _____ [Name of BPC] or its authorized representative shall not be obliged before enforcing this Surety Bond to take any action in any court or arbitral proceedings against the Bidder, to make any claim against or any demand on the Bidder or to give any notice to the Bidder to enforce any security held by _____[Name of BPC] or its authorized representative or to exercise, levy or enforce any distress, diligence or other process against the Bidder.

The Surety Insurer declares that it has power to issue this Surety Bond and discharge the obligations contemplated herein, the undersigned is duly authorised and has full power to execute this Surety Bond for and on behalf of the Surety Insurer.

Notwithstanding anything contained hereinabove, our liability under this surety bond is restricted to Rupees _____ Only (Rs ___ Crore) and it shall remain in force until ..... [Date to be inserted on the basis of Clause 2.11 of RFP], with an additional claim period of one hundred eighty (180) days thereafter. We are liable to pay the guaranteed amount or any part thereof under this Surety Bond only if _____ [Name of BPC] or its authorized representative serves upon us a written claim or demand.

In witness where of:

Signature.....

Name: .....

Power of attorney No/ Employee No. as applicable.:

For:

. .....[Insert Name of the Surety-Insurance Company]
Banker's Seal and Full Address, including mailing address of the Head Office

Notes:

1. The Stamp Paper should be in the name of the Executing Insurance Company.

ANNEXURE 14B - Format of Payment on Order Instrument to be issued by IREDA/ REC/ PFC

(to be submitted separately for each Project)

No. Date

.....[Insert name of BPC]

_____

Reg: M/s_____(insert name of the bidding entity)- **Issuance of Payment on Order Instrument for an amount of Rs._____**

Dear Sir,

1. At the request of M/s..... (Insert name of the bidding entity), this Payment on Order Instrument (POI) for an amount of Rs..... (Rupees (In words)) is being issued by M/s. (Insert Name of the POI issuing Agency) ('IREDA/REC/PFC'). This Payment on Order Instrument comes into force immediately.
2. In consideration of the …… ……. [Insert name of the Bidding Entity] (hereinafter referred to as 'Bidder') submitting the response to RFP issued by [Insert name of BPC] for the project [Insert name of the project] and [Insert name of BPC] considering such response to the RfP of M/s..... [Insert the name of Bidding Entity] as per the terms of the RFP, the .... [Insert name & address of IREDA/PFC/REC] hereby agrees unequivocally, irrevocably and unconditionally to pay to _____ [Insert name of BPC] at [Insert Name of the Place from the address of the BPC] forthwith without demur on demand in writing from ..... [Insert name of BPC] or any Officer authorized by it in this behalf, any amount up to and not exceeding Rupees [Insert amount not less than the bid bond value indicated in RFP] only, on behalf of M/s. ____[Insert name of the Bidding Entity].
3. In consideration of the above facts, IREDA/REC/PFC, having its registered office at ..... agrees to make payment for the sum of Rs (in words .....) to ..... [Insert name of BPC] on the following conditions:
   (a) IREDA/REC/PFC agrees to make payment of the above said amount unconditionally, without demur and without protest within a period of days of receipt of request from _____ [Insert name of BPC] within the validity period

of this letter as specified herein;

(b) The commitment of IREDA/REC/PFC, under this Payment on Order Instrument will have the same effect as that of the commitment under the Bank Guarantee issued by any Public Sector Bank and shall be enforceable in the same manner as in the case of a Bank Guarantee issued by a Bank and the same shall be irrevocable and shall be honoured irrespective of any agreement or its breach between IREDA/REC/PFC or its constituents notwithstanding any dispute that may be raised by them against _____ [Insert name of BPC];

(c) The liability of IREDA/REC/PFC continues to be valid and binding on IREDA/REC/PFC and shall not be terminated, impaired, and discharged by virtue of change in its constitution and specific liability under this POI shall be binding on its successors or assignors;

(d) The liability of IREDA/REC/PFC shall continue to be valid and binding on IREDA/REC/PFC and shall not be terminated/impaired/discharged by any extension of time or variation and alteration made, given or agreed with or without knowledge or consent of the parties _____ ([Insert name of BPC] and Bidder), subject however to the maximum extent of amount stated herein and IREDA/REC/PFC is not liable to any interest or costs etc.;

(e) This Payment on Order Instrument can be invoked either partially or fully, till the date of validity;

(f) IREDA/REC/PFC agrees that it shall not require any proof in addition to the written demand by _____ [Insert name of BPC] made in any format within the validity period. IREDA/REC/PFC shall not require [Insert name of BPC] to justify the invocation of the POI against the Bidder, to make any claim against or any demand against the Bidder or to give any notice to the Bidder;

(g) The POI shall be the primary obligation of IREDA/REC/PFC and ..... [Insert name of BPC] shall not be obliged, before enforcing the POI, to take any action in any court or arbitral proceedings against the Bidder;

(h) The POI shall not be affected in any manner by reason of merger, amalgamation, restructuring or any other changes in constitution of IREDA/REC/PFC;

(i) Neither the ..... [Insert name of BPC] is required to justify the invocation of this POI nor shall IREDA/REC/PFC have any recourse against the ..... [Insert name of BPC] in respect of the payment made under this POI.

4. Notwithstanding anything contrary contained anywhere in this POI or in any other documents, this POI is and shall remain valid up to _____ [Insert the date of validity of the POI as per Clause 2.11.1 of the RFP], with an additional claim period of three hundred and sixty-five (365) days thereafter and IREDA/REC/PFC shall make payment thereunder only if a written demand or request is raised within the said date and to the maximum extent of Rs..... and IREDA/REC/PFC shall in no case be liable for any interest, costs, charges, and expenses and IREDA's/REC's/PFC's liability in no case will

exceed more than the above amount stipulated.

5. In pursuance of the above, IREDA/REC/PFC and _____ [Insert name of BPC] have signed an Umbrella Agreement dated …… ... setting out the terms and conditions for issue of letter of undertaking by IREDA/REC/PFC to ..... [Insert name of BPC] and the said terms and conditions shall be read as a part of this POI issued for the project of PP mentioned above.

Thanking you,

Yours faithfully For and on behalf of

M/s.....

(Name of the POI issuing agency)

( )

General Manager

Copy to

M/s ..... as per their request

( )

General Manager

ANNEXURE 15 - FORMAT FOR CONTRACT PERFORMANCE GUARANTEE

(To be on non-judicial stamp paper of appropriate value as per Stamp Act relevant to place of execution. Foreign entities submitting Bids are required to follow the applicable law in their country)

In consideration of the …… [Insert name of the SPV or Selected Bidder on behalf of SPV or Lead Member in case of the Consortium, with address] agreeing to undertake the obligations under the Transmission Service Agreement dated …… and the other RFP Project Documents and the Maharashtra State Transmission Utility (STU) and ……_[Name of BPC], agreeing to execute the RFP Project Documents with the Selected Bidder, regarding setting up the Project, the……[Insert name and address of the bank issuing the guarantee and address of the head office] (hereinafter referred to as "Guarantor Bank") hereby agrees unequivocally, irrevocably and unconditionally to pay to the Maharashtra State Transmission Utility (STU) at…… [Insert Place and Address of the Maharashtra State Transmission Utility (STU) indicated in TSA] forthwith on demand in writing from the Maharashtra State Transmission Utility (STU) any Officer authorized by it in this behalf, any amount up to and not exceeding Rupees……Crores (Rs…….) only [Insert the amount of the bank guarantee] on behalf of M/s…… [Insert name of the Selected Bidder / SPV].

This guarantee shall be valid and binding on the Guarantor Bank up to and including ……..and shall not be terminable by notice or any change in the constitution of the Bank or the term of the Transmission Service Agreement or by any other reasons whatsoever and our liability hereunder shall not be impaired or discharged by any extension of time or variations or alternations made, given, or agreed with or without our knowledge or consent, by or between parties to the respective agreement.

Our liability under this Guarantee is restricted to Rupees ……. Crores (Rs……) only. Our Guarantee shall remain in force until…… [Insert the date of validity of the Guarantee as per Clause 2.12.1 of the RFP]. The Maharashtra State Transmission Utility (STU) shall be entitled to invoke this Guarantee up to three hundred sixty five (365) days of the last date of the validity of this Guarantee.

The Guarantor Bank hereby expressly agrees that it shall not require any proof in addition to the written demand from the Maharashtra State Transmission Utility (STU), made in any format, raised at the above mentioned address of the Guarantor Bank, in order to make the said payment to the Maharashtra State Transmission Utility (STU).

The Guarantor Bank shall make payment hereunder on first demand without restriction or conditions and notwithstanding any objection by _____[Name of SPV], …… [Insert name of the Selected Bidder], ……. [Insert name of the TSP] and/or any other person. The Guarantor Bank shall not require the Maharashtra State Transmission Utility (STU) to justify the invocation of this BANK GUARANTEE, nor shall the Guarantor Bank have any recourse against the Maharashtra State Transmission Utility (STU) in respect of any payment made hereunder.

This BANK GUARANTEE shall be interpreted in accordance with the laws of India.
The Guarantor Bank represents that this BANK GUARANTEE has been established in such form and with such content that it is fully enforceable in accordance with its terms as against the Guarantor Bank in the manner provided herein.
This BANK GUARANTEE shall not be affected in any manner by reason of merger, amalgamation, restructuring, liquidation, winding up, dissolution or any other change in the constitution of the Guarantor Bank.

This BANK GUARANTEE shall be a primary obligation of the Guarantor Bank and accordingly the Maharashtra State Transmission Utility (STU) shall not be obliged before enforcing this BANK GUARANTEE to take any action in any court or arbitral proceedings against _____[Name of SPV] or the Selected Bidder, to make any claim against or any demand on _____[Name of SPV] or the Selected Bidder, as the case may be, or to give any notice to _____[Name of SPV] or the Selected Bidder, as the case may be, or to enforce any security held by the Maharashtra State Transmission Utility (STU) or to exercise, levy or enforce any distress, diligence or other process against ……_[Name of SPV] or the Selected Bidder, as the case may be.

The Guarantor Bank acknowledges that this BANK GUARANTEE is not personal to the Maharashtra State Transmission Utility (STU) and may be assigned, in whole or in part, (whether absolutely or by way of security) by Maharashtra State Transmission Utility (STU) to any entity to whom the Maharashtra State Transmission Utility (STU) is entitled to assign its rights and obligations under the Transmission Service Agreement.

The Guarantor Bank hereby agrees and acknowledges that the Maharashtra State Transmission Utility (STU) shall have a right to invoke this Bank Guarantee either in part or in full, as it may deem fit.

Notwithstanding anything contained hereinabove, our liability under this Guarantee is restricted to Rupees ……..Crores (Rs ……..) only and it shall remain in force until [Date to be inserted on the basis of Article 3.1.2 of TSA], with an additional claim period of three hundred sixty five (365) days thereafter. This BANK GUARANTEE shall be extended from time to time for such period, as may be desired by…… [Insert name of the Selected Bidder or Lead Member in case of the Consortium or SPV]. We are liable to pay the guaranteed amount or any part thereof under this Bank Guarantee only if the Maharashtra State Transmission Utility (STU) serves upon us a written claim or demand.

In witness where of:

Signature……..

Name: ….……..…

Power of attorney No.: ……...

For:

…… [Insert Name of the Bank]
Banker's Seal and Full Address, including mailing address of the Head Office

Notes:
1. The Stamp Paper should be in the name of the Executing Bank.

ANNEXURE 15A - FORMAT FOR SURETY INSURANCE CONTRACT (ISB for CPG)

FORMAT FOR SURETY INSURANCE CONTRACT

(To be on non-judicial stamp paper of appropriate value as per Stamp Act relevant to place of execution.

Foreign entities submitting Bids are required to follow the applicable law of India)

In consideration of the ..... [Insert name of the SPV or Selected Bidder on behalf of SPV or Lead Member in case of the Consortium, with address] (hereinafter referred to as the **'Principal Debtor'** for the purposes of this Surety Insurance Contract as provided in Section 126 of the Indian Contract Act, 1872) having been selected to undertake the Transmission Project on the terms and conditions contained in the Transmission Service Agreement dated ...../ to be executed as per the Model Transmission Service Agreement provided along with the Request for Proposal **('RFP')** and other RFP Project Documents, subject to the condition of providing a Performance Bank Guarantee or a Surety Insurance Contract guaranteeing/insuring the due performance of the obligations under the Transmission Service Agreement, to the Maharashtra State Transmission Utility [herein after referred to as the Nodal Agency], the [Insert name and address of the Insurance Company issuing the Surety Insurance Contract and address of the head office] (hereinafter referred to as **"Surety")** hereby agrees unequivocally, irrevocably, absolutely and unconditionally, without demur, to pay to the Nodal Agency at _____ [Insert Place and Address of the Nodal Agency indicated in Transmission Service Agreement, or to the designated Bank Account of the Nodal Agency, namely.....] forthwith on demand in writing from the Nodal Agency, or any Officer authorized by it in this behalf, intimated to the Surety at the address mentioned above, any amount as may be decided by the Nodal Agency not exceeding Rupees .....Crores (Rs.....) only [Insert the amount of the Surety Insurance Contract]

The Surety hereby acknowledges, accepts and confirms that the Surety has received from the Principal Debtor, by way of premium the entire consideration for the Surety to execute, in favour of the Nodal Agency, this Surety Insurance Contract, as extended by the Surety from time to time and assuming the obligation to pay to the Nodal Agency the amount in terms hereof, without any requirement for payment of any other consideration to the Surety by the Principal Debtor, or otherwise.

This Surety Insurance Contract shall be valid and binding on the Surety, as the principal obligation of the Surety to pay on demand by the Nodal Agency, and shall not be terminable by notice or any change in the constitution of the Surety or the term of the Transmission Service Agreement or by any other reasons whatsoever and the liability hereunder of the Surety shall not be impaired or discharged by any extension of time or variations or alternations made, given, or agreed (with or without the knowledge or consent of the Surety)

by or between the Principal Debtor and the Nodal Agency.

The liability of the Surety under this Surety Insurance Contract is restricted to Rupees ..... Crores (Rs) only. The Surety Insurance Contract shall remain in force until [Insert the date of validity of the Surety Insurance Contract]. The Nodal Agency shall be entitled to invoke this Surety Insurance Contract up to three hundred sixty five (365) days after the last date of the validity of this Surety Insurance Contract.

The Surety hereby expressly agrees that it shall not require any proof except for the written demand from the Nodal Agency, containing the statement that the contractor has failed to meet its contractual obligations raised at the above mentioned address of the Surety (address of Surety office should be a place in NCR only) and the Surety shall pay the amount without reference to the Principal Debtor.

Any such demand made by the Nodal Agency on the Surety shall be conclusive and binding not withstanding any difference between the Nodal Agency and the Principal Debtor or any dispute pending before any Court, Tribunal, Arbitrator or any other authority. The Surety undertakes not to revoke this guarantee during its currency without previous consent of the Nodal Agency and further agrees that the Surety Insurance Contract herein contained shall continue to be enforceable till the Nodal Agency discharges this contract or till the expiry of tenor (including Claim period) whichever is earlier.

The Surety shall make payment hereunder within two (02) working days on first demand without restriction or conditions and notwithstanding any objection by the Principal Debtor, namely, ... [Insert name of SPV], or.....[Insert name of the Selected Bidder], or ..... [Insert name of the TSP] and/or any other person. The Surety shall not require the Nodal Agency to justify the invocation of this Surety Insurance Contract, nor shall the Surety have any recourse against the Nodal Agency in respect of any payment made hereunder.

This SURETY INSURANCE CONTRACT shall be interpreted in accordance with the laws of India.

This SURETY INSURANCE CONTRACT is being executed by the Surety in terms of the IRDAI (Surety Insurance Contract) Guidelines, 2022 and the Surety hereby acknowledges, accepts and confirms that this Surety Insurance Contract shall be a Contract of Guarantee as provided under Section 126 of the Indian Contract Act, 1872 and further shall be covered by Section 14(3)(b) of the Insolvency and Bankruptcy Code, 2016 (as amended) shall be enforceable as such.

The Surety represents that this Surety Insurance Contract has been established in such form

and with such content that it is fully enforceable in accordance with its terms as against the Surety in the manner provided herein.

This SURETY INSURANCE CONTRACT shall not be affected in any manner by reason of merger, amalgamation, restructuring, liquidation, winding up, dissolution or any other change in the constitution of the Surety.
In order to give effect to this surety Bond, the Nodal Agency shall be entitled to act as if the surety insurer were the principal debtor and any change in the constitution of the contractor and/or the surety insurer, whether by their absorption with any other body or corporation or otherwise, shall not in any way or manner affect the liability or obligation of the surety insurer under this surety Bond.

This SURETY INSURANCE CONTRACT shall be a primary obligation of the Surety as a Principal to pay on demand by the Nodal Agency and the Nodal Agency shall not be obliged before enforcing this Surety Insurance Contract to take any action in any court or arbitral proceedings against the Principal Debtor, namely, ... [Insert name of SPV], or .....[Insert name of the Selected Bidder], or .....[Insert name of the TSP] and/or any other person, as the case may be, to make any claim against or any demand on the Principal Debtor, namely, ...[Insert name of SPV], or ..... [Insert name of the Selected Bidder], or .....[Insert name of the TSP] and/or any other person, as the case may be, or to give any notice to Principal Debtor, namely..... [Insert name of SPV], or ..... [Insert name of the Selected Bidder], or .....[Insert name of the TSP] and/or any other person, as the case may be, or to enforce any security held by the Nodal Agency or to exercise, levy or enforce any distress, diligence or other process against the Principal Debtor, namely, ... [Insert name of SPV], or ..... [Insert name of the Selected Bidder], or ..... [Insert name of the TSP] and/or any other person, as the case may be.

The Surety acknowledges that this Surety Insurance Contract is not personal to the Nodal Agency and may be assigned, in whole or in part, (whether absolutely or by way of security) by Nodal Agency to any entity to whom the Nodal Agency is entitled to assign its rights and obligations under the Transmission Service Agreement Provided that any such assignment shall be in compliance with the relevant provisions of the Insurance Act 1938

The Surety hereby agrees and acknowledges that the Nodal Agency shall have a right to invoke this Surety Insurance Contract either in part or in full, as it may deem fit. In case of invocation of this Surety Insurance Contract in part, besides making payment for the part of Surety Insurance Contract invoked, surety at the request of Nodal Agency shall amend the value of Surety Insurance Contract to the extent of balance amount.

The Surety undertakes not to revoke this Surety Contract during its currency, except with the previous express consent of the Nodal Agency in writing and declares and warrants that it has the power to issue this Surety Contract and the undersigned has full powers to do so on behalf of the Surety

In witness where of:

Signature.....

Name: .....

Power of attorney No/ Employee No. as applicable.: ……

For:

..... [Insert Name of the Surety-Insurance Company]

Banker's Seal and Full Address, including mailing address of the Head Office

Notes:

1. The Stamp Paper should be in the name of the Executing Insurance Company.

ANNEXURE 15B- FORMAT FOR ISSUANCE OF PAYMENT ON ORDER INSTRUMENT (POI for CPG)

Format for Issuance of Payment on Order Instrument

Dear Sir,

1. Indian Renewable Energy Development Agency Limited ('IREDA")/PFC/REC has sanctioned a non-fund based limit loan of Rs. (Rupees..... Only) to M/s. …… [Insert name of SPV or selected Bidder] under the Loan Agreement executed on ..... to execute Transmission System Projects.

2. In consideration of the .....[Insert name of the SPV or Selected Bidder on behalf of SPV or Lead Member in case of the Consortium, with address] for the purposes of this Payment on Order Instrument ("POI") having been selected to undertake the Transmission Project on the terms and conditions contained in the Transmission Service Agreement dated ...../ to be executed as per the draft of the Model Transmission Service Agreement provided along with the Request for Proposal („RFP") and other RFP Project Documents, subject to the condition of providing a POI guaranteeing the due performance of the obligations under the Transmission Service Agreement to the Maharashtra State Transmission Utility ("Nodal Agency"), the.....[Insert name and address of the non-banking financial institutions(IREDA/PFC/REC) issuing the POI and address of the head office] (hereinafter referred to as **"Guarantor")** hereby agrees unequivocally, irrevocably, absolutely and unconditionally, without demur, to pay to the Nodal Agency at ..... [Insert Place and Address of the Nodal Agency indicated in Transmission Service Agreement, or to the designated Bank Account of the Nodal Agency, namely . . . . .] forthwith on demand in writing from the Nodal Agency, or any Officer authorized by it in this behalf, intimated to the Guarantor at the address mentioned above, any amount as may be decided by the Nodal Agency not exceeding Rupees ..... Crores (Rs) only [Insert the amount of Payment on Order Instrument]

3. At the request of .....and on behalf of M/s. ....., [Insert name of SPV or selected Bidder] this Payment on Order Instrument (POI) for an amount of Rs. ..... (Rupees .....) is being issued with IREDA/PFC/REC assuming the obligations to remit such amount to Nodal Agency from the sanctioned loan.

4. This Payment on Order Instrument comes into force immediately and IREDA/PFC/REC confirms that it has sufficient amount out of the sanctioned loan and shall maintain the required amount to pay under this Payment on Order Instrument, during the validity and claim period of this Payment on Order Instrument.

5. This POI has been issued by IREDA/PFC/REC utilizing the credit limit of

M/s.....[Insert name of SPV or selected Bidder] IREDA/PFC/REC confirms that its liability to pay under this Payment on Order Instrument shall be primary and independent of whether at the time of invocation of Payment on Order Instrument, the sanctioned funds are available or not and notwithstanding, the status of M/s_____[Insert name of SPV or selected Bidder] at the relevant time and to whether IREDA/PFC/REC is able to recover the amount advanced by it to the said developer.

6. IREDA/PFC/REC and M/s. …….[Insert name of SPV or selected Bidder] hereby acknowledges, accepts and confirms that this Payment on Order Instrument shall be a Contract of Guarantee as provided under Section 126 of the Indian Contract Act, 1872 and further shall be covered by Section 14(3)(b) of the Insolvency and Bankruptcy Code, 2016 (as amended) shall be enforceable as such.

7. IREDA/PFC/REC liability under this POI is restricted to Rupees Crores (Rs.....) only. This POI shall remain in force until..... [Insert the date of validity of the POI]. The Nodal Agency shall be entitled to invoke this POI up to three hundred sixty-five (365) days after the last date of the validity of this POI. This POI shall be extended from time to time for such period, as may be desired by the TSP.

8. The Guarantor hereby expressly agrees that it shall not require any proof except for the written demand from the Nodal Agency, raised at the above- mentioned address of the Guarantor (address of Guarantor office should be in NCR only) and the Guarantor shall pay the amount to the Nodal Agency without reference to the TSP.

9. Any such demand made by the Nodal Agency on the Guarantor shall be conclusive and binding not withstanding any difference between the Nodal Agency and the TSP or any dispute pending before any Court, Tribunal, Arbitrator or any other authority. The Guarantor undertakes not to revoke this guarantee during its currency without previous consent of the Nodal Agency and further agrees that the POI herein contained shall continue to be enforceable till the Nodal Agency discharges this contract or till the expiry of tenure or (including Claim period) whichever is earlier.

10. The Guarantor shall make payment hereunder within two (02) working days on first demand without restriction or conditions and notwithstanding any objection or disputes raised by the TSP, namely, ...[Insert name of SPV], or [Insert name of the Selected Bidder], or.....[Insert name of the TSP] and/or any other person. The Guarantor shall not require the Nodal Agency to justify the invocation of this POI, nor shall the Guarantor have any recourse against the Nodal Agency in respect of any payment made hereunder.

11. This POI shall be interpreted in accordance with the laws of India.

12. The Guarantor represents that this POI Contract has been established in such form and

with such content that it is fully enforceable in accordance with its terms as against the Guarantor in the manner provided herein.

13. This POI shall not be affected in any manner by reason of merger, amalgamation, restructuring, liquidation, winding up, dissolution or any other change in the constitution of the Guarantor.

14. This POI Contract shall be a primary obligation of the Guarantor as a Principal to pay on demand by the Nodal Agency and the Nodal Agency shall not be obliged before enforcing this POI Contract to take any action in any court or arbitral proceedings against the TSP, namely, ... [Insert name of SPV], or..... [Insert name of the Selected Bidder], or ..... [Insert name of the TSP] and/or any other person, as the case may be to make any claim against or any demand on the TSP, namely, ... [Insert name of SPV], or ..... [Insert name of the Selected Bidder], or ..... [Insert name of the TSP] and/or any other person, as the case may be, or to give any notice to TSP, namely..... [Insert name of SPV], or..... [Insert name of the Selected Bidder], or ..... [Insert name of the TSP] and/or any other person, as the case may be, or to enforce any security held by the Nodal Agency or to exercise, levy or enforce any distress, diligence or other process against the TSP, namely, ... [Insert name of SPV], or ……. [Insert name of the Selected Bidder], or ..... [Insert name of the TSP] and/or any other person, as the case may be.

15. The Guarantor acknowledges that this POI Contract is not personal to the Nodal Agency and may be assigned, in whole or in part, (whether absolutely or by way of security) by Nodal Agency to any entity to whom the Nodal Agency is entitled to assign its rights and obligations under the Transmission Service Agreement.

16. The Guarantor hereby agrees and acknowledges that the Nodal Agency shall have a right to invoke this POI Contract either in part or in full, as it may deem fit. In case of invocation of this POI Contract in part, besides making payment for the part of POI Contract invoked, Guarantor at the request of Nodal Agency shall amend the value of POI Contract to the extent of balance amount.

IN WITNESS WHERE OF the non- banking financial institutions through its authorized officer, has set its hand and stamp on this..... day of.....at.....

Signature .....

Name:

Power of attorney No.:

..... For:

.....[Insert Name of the non- banking financial institutions Company]

Seal and Full Address, including mailing address of the Head Office

ANNEXURE 16 – FORMAT OF CHECKLIST FOR TECHNICAL BID SUBMISSION REQUIREMENTS

[This format needs to be duly filled in, signed by the authorized signatory of the Bidder (Bidding Company / Lead Member in case of a Bidding Consortium) and submitted along with the Bidder's Technical Bid]

Technical Bid Submission Requirements	Response (Yes / No)
1. Format for the Covering Letter on the letterhead of Bidding Company or Lead Member of the Consortium, as applicable;	
2. Format for Letter of Consent from each Consortium Member, including Lead Member, on their respective letterheads;	
3. Format for evidence of authorized signatory's authority ;	
4. Board resolution from the Bidding Company / Lead Member of the Consortium in favour of the person executing the Power of Attorney as per **Annexure 3**;	
5. Power of Attorney from each Consortium Member in favour of Lead Member to be provided by each of the other Members of the Consortium as per **Annexure 4**;	
6. Board Resolution from each Member of the Consortium, other than the Lead Member, in favour of their respective authorized representatives for executing the POA, Consortium Agreement and signing of the requisite formats;	
7. Format for Bidder's composition and ownership structure, along with status of equity holding (owning ten percent or more of the total paid up equity) not earlier than thirty (30) days prior to the Bid Deadline as per **Annexure 5**;	
8. Consortium Agreement duly signed as per **Annexure 6**, along with Appendix-1, indicating the responsibilities and obligations of each Member of the Consortium;	
9. Format for Qualification Requirement:	
a. Calculation sheets, detailing computation of Networth considered for meeting Qualifying Requirements, duly signed and stamped by the Statutory Auditor of the Bidding Company / each Member in case of a Bidding Consortium / FEE in cases where credentials of FEE is taken;	
b. Calculation sheets, detailing computation of capital expenditure of projects and revenue received in construction projects considered for meeting Qualification Requirements, duly signed and stamped by the Statutory Auditor of the Bidding Company / Lead	

Technical Bid Submission Requirements	Response (Yes / No)
Member in case of Bidding Consortium / TEE in cases where credentials of TEE is taken;	
c. Last financial year unconsolidated / consolidated audited annual accounts / statements, as the case may be, of the Financially Evaluated Entity / Technical Evaluated Entity	
d. Unconsolidated audited annual accounts of both the TEE and the Bidding Company/Lead member, as applicable, from the financial years in which financial closure was achieved till the financial year in which the said project was completed / commissioned.	
10. Copy of the Memorandum and Articles of Association and certificate of incorporation or other organizational document (as applicable), including their amendments, certified by the Company Secretary of Bidding Company or each Member in case of a Consortium including Lead Member.	
11. Attachment of **Annexure 7(D)**, detailing projects completed / commissioned and for which commercial operation has commenced including Executive Summary for each project.	
12. For each project listed in the attachment above, certified true copy of the certificates of final acceptance and / or certificates of good operating performance duly issued by owners or clients for the project, duly signed by authorized signatory in support of technical capability as defined in Clause 2.1.2 of RFP.	
13. Authority letter in favour of BPC from the Bidder/every Member of the Consortium authorizing the BPC to seek reference from their respective bankers & others.	
14. Authorization from Parent / Affiliate of Bidding Company / Member of Bidding Consortium whose technical / financial capability has been used by the Bidding Company / Member of Bidding Consortium.	
15. Initialing of all pages of Technical Bid by the Authorized Signatory in whose favour the POA (**Annexure 3**) has been executed.	
16. Format for Illustration of Affiliates at the most seven (7) days prior to the Bid Deadline, duly certified by Company Secretary and supported by documentary evidence.	
17. Certified copy of the Register of Members / Demat Account Statement, Share Certificate, Annual Return filed with ROC	

Technical Bid Submission Requirements	Response (Yes / No)
etc. submitted as documentary evidence along with **Annexure 12**.	
18. Format for Disclosure by Bidding Company / each Member of the Consortium.	
19. Format for Affidavit by the Bidding Company / each Member of the Consortium	
20. Format for Authorization submitted in Non-Judicial stamp paper duly notarized.	
21. Bidders Undertaking and details of Equity Investment	
22. Proof of Payment of RFP Fees	
23. Bid Bond/ ~~Bid Security Declaration (As applicable)~~	
24. Board Resolution as per Annexure 11 (If required)	

[**Note:** The checklist is not exhaustive. Bidders are required to submit all the information/documents as per requirement of RFP]

For and on behalf of Bidder

M/s. …….

……..
(Signature of authorized signatory)

ANNEXURE 17 – LIST OF BANKS

The list of banks shall include all Scheduled Commercial Banks as per Second Schedule of RBI Act-1934 and any amendments thereof.

Note:
The above list of banks is indicative and can be modified by the BPC as required and any such change shall not be construed as a deviation from this document.

ANNEXURE 18 - GRID MAP OF THE PROJECT

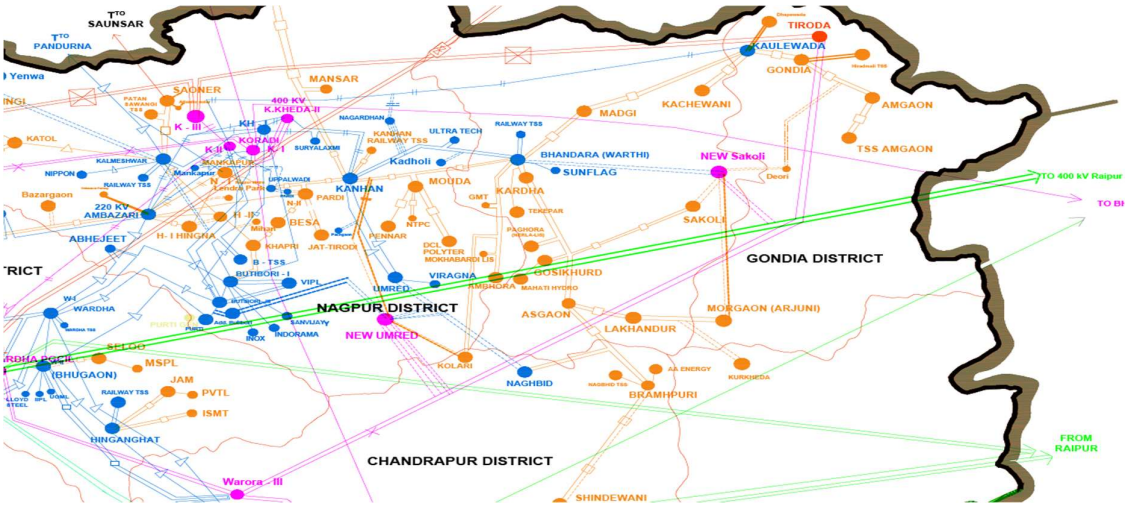

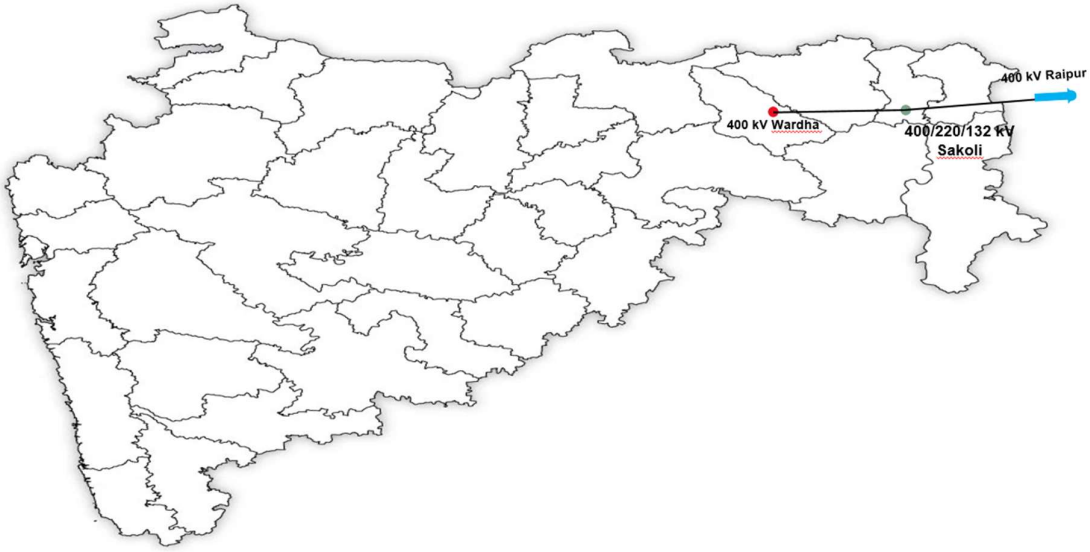

ANNEXURE 19 - FORMAT FOR CLARIFICATIONS / AMENDMENTS ON THE RFP / RFP PROJECT DOCUMENTS

S. No.	Name of the Document	Clause No. and Existing provision	Clarification required	Suggested text for the amendment	Rationale for the Clarification or Amendment

Signature ……

Name……...

For

Bidder's Rubber Stamp and Full Address.

(Note: This format shall be used for submission of requests for clarifications/ amendments on the draft RFP Project Documents as per the provisions of Clause 2.3.1)

ANNEXURE 20 - LIST FOR RFP PROJECT DOCUMENTS

ENCLOSURE 1: TRANSMISSION SERVICE AGREEMENT (Provided separately)

ENCLOSURE 2: SHARE PURCHASE AGREEMENT (Provided Separately)

……..

[To be inserted by the BPC]

ANNEXURE 21 - FORMAT FOR FINANCIAL BID

[To be uploaded online]

Quoted Transmission Charges ……..

Notes

1. The Bidders are required to ensure compliance with the provisions of Clause 2.5.3 of this RFP.

2. Quotes to be in Rupees Millions and shall be up to two (2) decimal points.

3. The contents of this format shall be clearly typed.

4. The Financial Bid shall be digitally signed by the authorized signatory in whose name power of attorney as per Clause 2.5.2 is issued.

5. Ensure only one value for annual Transmission Charges is quoted. The same charge shall be payable every year to TSP for the term of TSA.

ANNEXURE 22 – FORMAT FOR AFFIDAVIT

[On non-judicial stamp paper. Foreign companies submitting bids are required to follow the applicable law in their country]

AFFIDAVIT

We [including any of our Affiliate and Consortium Member & any of its Affiliate], hereby declare that as on Bid Deadline:

a. the Bidder & any of its Affiliate including any Consortium Member & any of its Affiliate, their directors or key personnel have not been barred or included in the blacklist by any government agency or authority in India, the government of the jurisdiction of the Bidder or Members where they are incorporated or the jurisdiction of their principal place of business, any international financial institution such as the World Bank Group, Asian Development Bank, African Development Bank, Inter-American Development Bank, Asian Infrastructure Investment Bank etc. or the United Nations or any of its agencies; or

b. the Bidder & any of its Affiliate including any Consortium Member & any of its Affiliate or their directors have not been convicted of any offence in India or abroad.

We further declare that following investigations are pending / no investigation is pending [strike off whichever is not applicable] against us [including any of our Consortium Member or Affiliate or Parent or Ultimate Parent or Affiliate] or CEO or any of our directors/ manager/key managerial personnel of the Applicant /Consortium Member or their Affiliates.

We further undertake to inform the BPC of any such matter as mentioned above on its occurrence after the date of this affidavit till the Effective Date.

We undertake that, in case, any information provided in relation to this affidavit is found incorrect at any time hereafter, our BID / Letter of Intent / contract (if entered) would stand rejected / recalled / terminated, as the case may be.

…….
Signature and Name of the authorized signatory of the Company Bidding Company / Lead Member of the Bidding Consortium

……..
(Signature of Notary Public)

Place:……
Date:……

Note: In case any investigation is pending against the Applicant, including any Consortium Member or Affiliate, or CEO or any of the directors/ manager/key managerial personnel of the Applicant /Consortium /Member or their Affiliates, full details of such

investigation including the name of the investigating agency, the charge/offence for which the investigation has been launched, name and designation of persons against whom the investigation has been launched and other relevant information should be disclosed under this affidavit.

ANNEXURE A

Technical Details with respect to electronic bidding

Registration Methodology

In order to submit online bids in the e-bidding process for selection of Transmission Service Provider, interested Bidders are required to register themselves with the e-procurement website of MSTC Limited namely www.mstcecommerce.com/eprochome/tsp/index.jsp. To register with the website, the Bidder is required to fill up the online form available under the link Register as Vendor in the above website and fill up the same and click on Submit.

During this process, the bidder shall create his user id and password and keep note of the same. The bidder shall ensure that the secrecy of his user id and password is maintained at all time and he/she shall alone be responsible for any misuse of the user id and password.

The bidder may check the details entered by it before final submission. On successful submission of the online registration Form, the bidder shall receive a confirmation mail in the registered email address advising the bidder to submit the following documents.

~~i.~~ Self attested Income Tax PAN Card. In case of a registered Company or Firm, the Firm's PAN card and in case of a proprietorship firm, proprietor's personal PAN card is required. In case of partnership firm, PAN of the firm and that of the authorized partner are to be submitted.

~~ii.~~ Copy of the confirmation email Letter received from MSTC after successful completion of on-line registration..

~~iii.~~ A non refundable registration fee of Rs 10,000/- plus applicable GST to be paid online.

Please provide details of payment made like UTR No, remitting bank name, date of payment and amount in the covering letter.

The bidder shall have to submit all the above documents to MSTC Limited for verification and activation of their login ids. The bidders should send scanned copies of the above documents to the designated email id only which is given below.

tsp@mstcindia.co.in

It may be noted that bidders need not visit any of the offices of MSTC Limited for submission of the documents.

Contact persons of MSTC Limited: **Mr. Setu Dutt Sharma, 7878055855**

Once the complete set of documents and requisite registration fee are received from a bidder, MSTC shall activate the bidder's login after verification / scrutiny of the documents. MSTC Limited reserves the right to call for additional documents from the bidder if needed and the bidder shall be obliged to submit the same.
On completion of the above stated registration process, a bidder shall be able to login to MSTC's website.

ANNEXURE B

Draft Pre-Award Integrity Pact

[Can be suitably modified by BPC]

GENERAL

This pre-bid contract Agreement (herein after called the Integrity Pact) is made on …….. day of the month of ……. 20……, between, on one hand, ……. [Insert name of BPC] through Shri …….. [Insert Name & designation of representative of BPC] (hereinafter called the "Bid Process Coordinator/ BPC", which expression shall mean and include, unless the context otherwise requires, his successors in the office and assigns) of the First Part and M/s …… represented by Shri …….. [Insert Name & Designation of Authorized Signatory of the Bidder/ Lead Member of Consortium] (hereinafter called the "Bidder" which expression shall mean and include, unless the context otherwise requires, his successors and permitted assigns) of the Second Part.

WHEREAS the BPC is conducting the bidding process for selection of bidder as Transmission Service Provider (TSP) to develop Intra-State Transmission Project i.e. "Establishment of 400/220/132 kV AIS Sakoli (Dist. Bhandara)", who will be responsible to set up the transmission project on build, own, operate and transfer (BOOT) basis and to provide Transmission Service.

WHEREAS the Bidder is a Private Company/Public Company/Government Undertaking/ Partnership, constituted in accordance with the relevant law in the matter and the BPC is a Public Sector Undertaking (PSU) performing its function on behalf of the Ministry of Power, Government of India.

NOW, THEREFORE,

To avoid all forms of corruption by following a system that is fair, transparent and free from any influence/prejudiced dealings during the complete bidding process with a view to:-

Enabling the BPC to select the bidder as TSP in conformity with the defined procedures by avoiding the high cost and the distortionary impact of corruption on public procurement, and

Enabling Bidder to abstain from bribing or indulging in any corrupt practice in order to emerge as selected bidder by providing assurance to them that their competitors will also abstain from bribing and other practices and the BPC will commit to prevent corruption, in any form, by its officials by following transparent procedures.
The parties hereto hereby agree to enter into this Integrity Pact and agree as follows:

Commitments of BPC

1.1 The BPC undertakes that no official of the BPC, connected directly or indirectly with the bidding process, will demand, take a promise for or accept, directly or through intermediaries, any bribe, consideration, gift, reward, favour or any material or immaterial benefit or any other advantage from the BIDDER, either for themselves or for any person, organization or third party related to the bidding process in exchange for an advantage in the bidding process, bid evaluation, contracting or implementation process related to the contract.

1.2 The BPC will, during the bidding stage, treat all bidders alike, and will provide to all bidders the same information and will not provide any such information to any particular bidder which could afford an advantage to that particular bidder in comparison to the other bidders.

1.3 All the officials of the BPC will report the appropriate Government office any attempted or completed breaches of the above commitments as well as any substantial suspicion of such a breach.

2. In case of any such preceding misconduct on the part of such official(s) is reported by the Bidder to the BPC with the full and verifiable facts and the same is *prima facie* found to be correct by the BPC, necessary disciplinary proceedings, or any other action as deemed fit, including criminal proceedings may be initiated by the BPC and such a person shall be debarred from further dealings related to the bidding process. In such a case while an enquiry is being conducted by the BPC the proceedings under the bidding process would not be stalled.

Commitments of Bidder

3. The Bidder commits itself to take all measures necessary to prevent corrupt practices, unfair means and illegal activities during any stage of its bid or during any pre award stage in order to emerge as Selected Bidder or in furtherance to secure it and in particular commits itself to the following:-

3.1 The Bidder will not offer, directly or through intermediaries, any bribe, gift, consideration, reward, favour, any material or immaterial benefit or other advantage, commission, fees, brokerage or inducement to any official of the BPC, connected directly or indirectly with the bidding process, or to any person, organization or third party related to the bidding process in exchange for any advantage in the bidding, evaluation, contracting and implementation of the bidding process.

3.2 The Bidder further undertakes that it has not given, offered or promised to give, directly or indirectly any bribe, gift, consideration, reward, favour, any material or immaterial benefit or other advantage, commission, fees, brokerage or inducement to any official of the BPC or otherwise in bidding process or for bearing to do or having done any act in relation to bidding process or any other contract with the

Government for showing or forbearing to show favour or disfavour to any person in relation to the bidding process or any other contract with the Government.

3.3 The Bidder shall disclose the name and address of agents and representatives and Indian Bidder shall disclose their foreign principals or associates.

3.4 The Bidder shall disclose the payments to be made by them to agents/brokers or any other intermediary, in connection with this bid .

3.5 The Bidder further confirms and declares to the BPC that the Bidder has not engaged any individual or firm or company whether Indian or foreign to intercede, facilitate or in any way to recommend to the BPC or any of its functionaries, whether officially or unofficially for selection of Bidder as TSP, nor has any amount been paid, promised or intended to be paid to any such individual, firm or company in respect of any such intercession, facilitation or recommendation.

3.6 The Bidder, either while presenting the bid or during pre-award negotiations or before signing the Share Purchase Agreement, shall disclose any payments he has made, is committed to or intends to make to officials of the BPC or their family members, agents, brokers or any other intermediaries in connection with the bidding process and the details of services agreed upon for such payments.

3.7 The Bidder will not collude with other parties interested in the bidding process to impair the transparency, fairness and progress of the bidding process.

3.8 The Bidder will not accept any advantage in exchange for any corrupt practice, unfair means and illegal activities.

3.9 The Bidder shall not use improperly, for purpose of competition or personal gain, or pass on to others, any information provided by the BPC as part of the business relationship, regarding plans, technical proposal and business details, including information contained in any electronic data carrier. The Bidder also undertakes to exercise due and adequate care lest any such information is divulged.

3.10 The Bidder commits to refrain from giving any complaint directly or through any other manner without supporting it with full and verifiable facts.

3.11 The Bidder shall not instigate or cause to instigate any third person to commit any of the actions mentioned above.

3.12 The Bidder shall not lend to or borrow any money from or enter into any monetary dealings or transactions, directly or indirectly, with any employee of the BPC.

4. Previous Transgression

4.1 The Bidder declares that no previous transgression occurred in the last three years

immediately before signing of this Integrity Pact, with any other company in any country in respect of any corrupt practices envisaged hereunder or with any Public Sector Enterprise in India or any Government Department in India that could justify Bidder's exclusion from the bidding process.

4.2 The Bidder agrees that if it makes incorrect statement on this subject, Bidder can be disqualified from the tender process or the contract, if already awarded, can be terminated for such reason.

5. Bid Bond (Security Deposit)

5.1 Along with the technical bid, the Bidder shall submit Bid Bond for an amount of Rs. ……. (as per the amount specified in Request for Proposal (RFP) Document) issued by …… [Insert Name of the Banks from the list provided in RFP Document] as Earnest Money/Security Deposit, with the BPC.

5.2 The Earnest Money/Security Deposit shall be valid & retained by the BPC for such period as specified in the RFP Document.

5.3 No interest shall be payable by the BPC to the Bidder on Earnest Money/Security Deposit for the period of its currency.

6. Sanctions for Violations

6.1 Any breach of the aforesaid provisions by the Bidder or any one employed by it or acting on its behalf (whether with or without the knowledge of the Bidder) shall entitle the BPC to take all or anyone of the following actions, wherever required:-

(i) To immediately call off the pre-award negotiations without assigning any reason or giving any compensation to the Bidder. However, the proceedings with the other Bidder (s) would continue.

(ii) The Bid Bond (in pre-award stage) shall stand forfeited either fully or partially, as decided by the BPC and the BPC shall not be required to assign any reason therefore.

(iii) To immediately cancel the award, if already awarded, without giving any compensation to the Bidder.

(iv) To cancel all or any other contracts with the Bidder. The Bidder shall be liable to pay compensation for any loss or damage to the BPC resulting from such cancellation/rescission.

(v) To debar the Bidder from participation in any tender or RFP issued by any BPC for an indefinite period.

(vi) To recover all sums paid in violation of this Pact by Bidder to any middleman or agent or broker with a view to securing the award.

6.2 The BPC will be entitled to take all or any of the actions mentioned at para 6.1 (i) to (vi) of this Pact also on the Commission by the Bidder or anyone employed by it or acting on its behalf (whether with or without the knowledge of the Bidder), of an offence as defined in Chapter IX of the Indian Penal code, 1860 or Prevention of Corruption Act, 1988 or any other statute enacted for prevention of corruption.

6.3 The decision of the BPC to the effect that a breach of the provisions of this Pact has been committed by the Bidder shall be final and conclusive on the Bidder. However, the Bidder can approach the Independent Monitor(s) appointed for the purposes of this Pact.

7. Independent Monitors

7.1 The BPC has appointed Independent Monitors (hereinafter referred to as Monitors) for this Pact in consultation with the Central Vigilance Commission (Names and Addresses of the Monitors to be given).

1. Smt. Sobhana Kamala Sudarsana Rao IFS (Retd), Procurement and Contract Management (PCM) Division, REC Limited, I-4, Sector-29, Gurugram, Haryana, INDIA, mail: sobhanarao[at]yahoo[dot]co[dot]in.
2. Shri. Hareshwar Sharma IRS (Retd), Procurement and Contract Management (PCM) Division, REC Limited, I-4, Sector-29, Gurugram, Haryana, INDIA, mail: hareshwarsharma62[at]gmail[dot]com.
3. Shri. Sanjay Chander IPS (Retd), Procurement and Contract Management (PCM) Division, REC Limited, I-4, Sector-29, Gurugram, Haryana, INDIA, mail: dgrpf1963[at]gmail[dot]com.

7.2 The task of the Monitors shall be to review independently and objectively, whether and to what extent the parties comply with the obligations under this Pact.

7.3 The Monitors shall not be subject to instructions by the representatives of the parties and perform their functions neutrally and independently.

7.4 Both the parties accept that the Monitors have the right to access all the documents relating to the project/procurement, including minutes of meetings.

7.5 As soon as the Monitor notices, or has reason to believe, a violation of this Pact, he will so inform the Authority designated by the BPC.

7.6 The Bidder accepts that the Monitors has the right to access without restriction to all Project documentation of the BPC including that provided by the Bidder. The Monitor shall be under contractual obligation to treat the information and documents of the Bidder /Subcontractors(s) with confidentially. [As all the bid documents are with BPC

only]

7.7 The BPC will provide to the Monitors sufficient information about all meetings among the parties related to the Project provided such meetings could have an impact on the contractual relations between the parties. The parties will offer to the monitor the option to participate in such meetings.

7.8 The Monitor will submit a written report to the designated Authority of the BPC/Secretary in the Department within 8 to 10 weeks from the date of reference or intimation to him by the BPC / Bidder and, should the occasion arise, submit proposals for correcting problematic situations.

8. Facilitation of Investigation

In case of any allegation of violation of any provisions of this Pact or payment of commission, the BPC or its agencies shall be entitled to examine all the documents including the Books of Accounts of the Bidder and the Bidder shall provide necessary information and documents in English and shall extend all possible help for the purpose of such examination.

9. Law and Place of Jurisdiction

This Pact is subject to Indian Law. The place of performance and jurisdiction is the seat of the BPC.

10. Other Legal Actions

The actions stipulated in this Integrity Pact are without prejudice to any other legal action that may follow in accordance with the provisions of the any extent law in force relating to any civil or criminal proceedings.

11. Validity

11.1 The validity of this Integrity Pact shall be from date of its signing and upto 6 months from the date of transfer of project specific SPV i.e. signing of Share Purchase Agreement with BPC. In case Bidder is unsuccessful, this Integrity Pact shall expire after 15 days from the date of transfer of project specific SPV to successful bidder.

11.2 Should one or several provisions of this Pact turn out to be invalid, the remainder of this Pact shall remains valid. In this case, the parties will strive to come to an agreement to their original intentions.

12. The Parties hereby sign this Integrity Pact at on _____

Bid Process Coordinator (BPC)	BIDDER
Name of the Officer Designation Name of the BPC with address Witness: 1._____ 2. _____	Name of Whole time Director/Authorized Signatory Name of the Bidder with address Witness: 1._____ 2. _____

ANNEXURE C

Technical Specifications of Transmission System

A. SPECIFIC TECHNICAL REQUIREMENTS FOR TRANSMISSION LINES

A.1.0 The design, routing and construction of transmission lines shall be in accordance with Chapter V, Part A of CEA (Technical Standards for Construction of Electrical Plants and Electric Lines) Regulations 2022, as amended from time to time. Other CEA Regulations and MoP guidelines, as applicable, shall also be followed.

A.2.0 Selection of tower type shall be made as per CEA Regulations, however in case lattice type towers are used, the following shall also be applicable:

A.2.1 Steel section of grade E 250 and/or grade E 350 as per IS 2062, only are permitted for use in towers, extensions, gantry structures and stub setting templates. For towers in snowbound areas, steel sections shall conform to Grade-C of IS-2062.

A.2.2 Towers shall be designed as per IS-802:2015, however the drag coefficient of the tower shall be as follows: -

Solidity Ratio	Drag Coefficient
Up to 0.05	3.6
0.1	3.4
0.2	2.9
0.3	2.5
0.4	2.2
0.5 and above	2.0

A.3.0 Transmission Service Provider (TSP) shall adopt any additional loading/design criteria for ensuring reliability of the line, if so desired and /or deemed necessary.

A.4.0 Transmission line shall be designed considering wind zones as specified in wind map given in National Building Code 2016, Vol.1. The developer shall also make his own assessment of local wind conditions and frequent occurrences of high intensity winds (HIW) due to thunderstorms, dust-storms, downburst etc. along the line route and wherever required, higher wind zone than that given in wind map shall be considered for tower design for ensuring reliability of line. Further, for transmission line sections passing within a distance of 50 km from the boundary of two wind zones, higher of the two wind zones shall be considered for design of towers located in such sections.

A.5.0 Selection of reliability level for design of tower shall be as per CEA Regulation (Technical Standards for Construction of Electrical Plants and Electric Lines) Regulations 2022, as amended from time to time.

A.6.0 For power line crossings, following should be followed:

a. Under crossing of the existing transmission line of same Voltage shall not be allowed. In the case where it is inevitable to under-cross the existing transmission line then TSP shall seek prior approval from Chief Electrical Inspector, CEA with detailed study ensuring that all statutory electrical clearances and Electric Field limit of 10 kV/m at 1 m and 1.8 m from ground level is not violated.

b. For power line crossing of 400 kV or above voltage level, large angle and dead end towers (i.e. D/DD/QD) shall be used on either side of power line crossing.

c. For power line crossing of 132 kV and 220 kV (or 230 kV) voltage level, angle towers (B/C/D/DB/DC/DD/QB/QC/QD) shall be used on either side of power line crossing depending upon the merit of the prevailing site condition and line deviation requirement.

d. For power line crossing of 66 kV and below voltage level, suspension/tension towers shall be provided on either side of power line crossing depending upon the merit of theprevailing site condition and line deviation requirement.

e. For crossing of railways, national highways and state highways, the rules/regulations of appropriate authorities shall be followed.

A.7.0 The relevant conductor configuration shall be as follows: -

(a) For all 400 kV lines under present scope

Type of conductor: ACSR / AAAC / AL59

Transmission line	ACSR Conductor specified	EquivalentAAAC conductor based on 53% conductivity of Al Alloy	Equivalent minimum size of AL59 conductor based on 59% conductivity of AL Alloy*	Sub-conductor Spacing
400 kV D/C (Quad Bundle) transmission lines	**Moose: Stranding** 54/3.53mm-Al + 7/3.53 mm- Steel, 31.77 mm diameter 528.5 mm^2, Aluminium area, Maximum DC Resistance at	**Stranding details:** 61/3.55(61/3.66) mm 31.95 (32.94) mm diameter; 604 (640) mm^2 Aluminium alloy area	**Stranding details:** 61/3.31mm 29.79 mm diameter; 525 mm^2 Aluminium alloyarea Maximum DC Resistance at 20°C (Ω/km): 0.0566	457 mm

Transmission line	ACSR Conductor specified	EquivalentAAAC conductor based on 53% conductivity of Al Alloy	Equivalent minimum size of AL59 conductor based on 59% conductivity of AL Alloy*	Sub-conductor Spacing
	20°C (Ω/km): 0.05552 Minimum UTS: 161.20 kN	Maximum DC Resistance at 20°C (Ω/km): 0.05506 (0.0534) Minimum UTS: 159.80 (178.43) kN	Minimum UTS: 124.70 kN	

(b) For all 200 kV lines under present scope

Transmission line	ACSR Conductor specified	Equivalent AAAC conductor based on 53% conductivity of Al Alloy	Equivalent minimum size of AL59 conductor based on 59% conductivity of AL Alloy*	Sub-conductor Spacing
220 kV D/C (Zebra) transmission lines	Zebra: Stranding 54/3.18 mm-Al + 7/3.18 mm-Steel, 428 sq mm, Aluminium area, 28.62 mm diameter	Stranding Details: 61/3.19 mm 28.71 mm diameter; 487.5 sq.mm Aluminum alloy area	Stranding Details: 61/3.08 mm 27.7 mm diameter; 454 sq.mm Aluminium alloy area	NA

(c) For all 132 kV lines under present scope

Transmission line	ACSR Conductor specified	Equivalent AAAC conductor based on 53% conductivity of Al Alloy	Equivalent minimum size of AL59 conductor based on 59% conductivity of AL Alloy*	Sub- conductor Spacing
132 kV D/C (Panther) transmission lines	**Panther : Stranding** 30/3.0mm-Al + 7/3.0 mm- Steel, 21.00 mm diameter	**Stranding details:** 37/3.15mm, 22.05mm diameter;	**Stranding details:** 37/3.08 mm, 21.56 mm diameter; 275.66 sq. mm, Aluminium alloy area	NA

	212.05 sq mm, Aluminium area, Maximum DC Resistance at 20°C (Ω/km): 0.1390 Minimum UTS : 89.67 kN	288.3 sq. mm, Aluminium alloy area Maximum DC Resistance at 20°C (Ω/km) : 0.1182 Minimum UTS : 84.71 kN	Maximum DC Resistance at 20°C (Ω/km) : 0.1075 Minimum UTS : 66.47 kN	

Note: *1. To select any size above the minimum, the sizes mentioned in the relevant Indian standard i.e. IS-398 (part-6) shall be followed.

2. The transmission lines shall have to be designed for a maximum operating conductor temperature of 85 deg C.

A.8.0 The required phase to phase spacing and horizontal spacing for 400 kV line shall be governed by the tower design as well as minimum live metal clearances for 400 kV voltage level under different insulator swing angles. However, the phase to phase spacing for 400 kV lines shall not be less than 8 m.

A.9.0 All electrical clearances including minimum live metal clearance, ground clearance and minimum mid span separation between earth wire and conductor as given below shall be considered.

I. <u>Minimum live metal clearances for 400 kV line:</u>

a) (i) Under stationary conditions:

From tower body: 3.05 m

(ii) Under Swing conditions

Wind Pressure Condition	Minimum Electrical Clearance
a) Swing angle (22º)	3.05 m
b) Swing angle (44º)	1.86 m

b) Minimum ground clearance for 400 kV line: 8.84 m

c) Minimum mid span separation between earth wire and conductor for 400 kV line: 9.0 m

II. Minimum live metal clearances for 220 kV line:

(a) <u>Under stationary conditions</u>

From tower body: 2.13 m

(b) Under swing conditions

Wind pressure Condition	Minimum electrical clearance
a) Swing angle (15º)	1.98 m
b) Swing angle (30º)	1.83 m
c) Swing angle (45º)	1.675 m

(c) Minimum ground clearance: 7.015 m

(d) Minimum mid span separation between earth-wire and conductor: 8.5 m

III. Minimum live metal clearances for 132 kV line:

(a) Under stationary conditions

From tower body: 1.53 m

(b) Under swing conditions

Wind pressure Condition	Minimum electrical clearance
a) Swing angle (15º)	1.53 m
b) Swing angle (30º)	1.37 m
c) Swing angle (45º)	1.22 m
d) Swing angle (60º)	1.07 m

(c) Minimum ground clearance: 6.1 m

(d) Minimum mid span separation between earth-wire and conductor: 6.1 m

A.10.0 Shielding angle shall not exceed 20 deg for 400 kV D/C Line transmission line and shall not exceed 30 deg for 220 kV & 132 kV transmission lines.

A.10.01 Transposition is to be done for all transmission lines whose length is greater than 100 km. Transposition should be carried out at 1/3 and 2/3 of line length tower positions. Transposition of the transmission line after construction of LILO shall be maintained by developer.

A.11.0 The Fault current for design of line shall be 63 kA for 1 sec for 400 Kv, 50kA for 1sec for 220kV & 40kA for 1 sec for 132kV.

A.12.0 In case of 400 kV voltage class lines, at least one out of two earth wires shall be OPGW and second earth wire, if not OPGW, shall be either of galvanized stranded steel (GSS) or Aluminum Alloy Conductor Steel Reinforced (AACSR) conductor type or any other suitable conductor type depending upon span length and other technical consideration.

In case of 220 kV and 132 kV voltage class transmission lines support towers with single peak, only one OPGW has to be installed.

A.13.0 Each tower shall be earthed such that tower footing impedance does not exceed 10 ohms. Pipe type or Counterpoise type earthing shall be provided in accordance with relevant IS. Additional earthing shall be provided on every 7 to 8 kms distance for direct earthing of

both shield wires. If site condition demands, multiple earthing or use of earthing enhancement compound shall be used.

A.14.0 Pile type foundation shall be used for towers located in river or creek bed or on bank of river having scourable strata or in areas where river flow or change in river course is anticipated, based on detailed soil investigation and previous years' maximum flood discharge of the river, maximum velocity of water, highest flood level, scour depth and anticipated change in course of river based on river morphology data of at least past 20 years to ensure availability and reliability of the transmission line.

A.15.0 Transmission line route shall be finalized, in consultation with appropriate authorities so as to avoid the habitant zones of endangered species and other protected species. Bird diverters, wherever required, shall be provided on the line.

A.16.0 Wherever, transmission lines are passing through cyclone prone areas i.e. areas up to 60 km from coast following shall also be applicable:

a) Terrain category-I, with terrain roughness factor (K2) of 1.08 shall be considered for tower design for exposed open terrain with few or no obstruction which also includes open sea coasts, open stretch of water, desert and flat treeless plains.

b) Importance factor for cyclonic region (K4) of 1.3 shall be considered for tower design.

c) The number of consecutive spans between the section points/ angle point shall not exceed 10 spans or 3 km instead of conventional practice of 15 spans or 5 km, in order to reduce the failure of such towers in coastal areas due to cascading effect. The section shall be terminated with tension tower/ angle tower and angle of deviation should be based on the site requirement.

A.17.0 Wherever, transmission lines are passing through cyclone prone areas (i.e. areas up to 60 km from coast)/ creek regions/ aggressive soil areas following shall also be applicable:

a) The fabricated tower parts and stubs shall have a minimum overall zinc coating of 900 g/m^2 of surface area except for plates and sections below 5 mm which shall have a minimum overall zinc coating of 610 g/m^2 of surface area. The average zinc coating for all sections and plates 5 mm and above shall be maintained as 127 microns and that for plates and sections below 5 mm shall be maintained as 87 microns.

b) Ready mix concrete of M30 Grade shall be used to avoid use of locally available saline water. However, design mix concrete of M30 Grade conforming to IS 456 with potable water can be used at locations where transportation of ready-mix concrete is not feasible. Minimum cement content in any case shall not be less than 330 kg/m^3.

c) The surface of the reinforced steel shall be treated with epoxy-based coating to enhance corrosion performance of foundation. Use of epoxy coated

reinforcement in foundation shall be as per IS 13620. In addition, two (2) coats of bituminous painting of minimum 1.6 kg/m^2 per coat shall be applied on all exposed faces of foundation (i.e. pedestal and base slab).

d) Double coat of 20 mm thick cement plaster shall be provided on all exposed concrete surface as well up to 300 mm below ground level to give protection to concrete surface from environmental and saline effect.

e) Before coping of chimney top portion, three coats of anti-corrosive paint of minimum 30-35 microns dry film thickness each shall be applied on the stub in the 50 mm coping portion as well as up to 350 mm above CL portion.

A.18.0 The raised chimney foundation is to be provided in areas prone to flooding/water stagnation like paddy field /agricultural field and undulated areas to avoid direct contact of water with steel part of tower. The top of the chimney of foundation should be at least above HFL (High Flood Level) or the historical water stagnation/ logging level (based on locally available data) or above High Tide Level or 500 mm above Natural Ground level (whichever is higher).

A.19.0 Routing of transmission line through protected areas of India shall be avoided to the extent possible. In case, it is not possible to avoid protected areas, the towers of the transmission line up to 400 kV level which are installed in protected areas shall be designed for Multi-circuit (4 circuits) configuration of same voltage level considering reliability level of at least two (2). The top two circuits of these multi-circuit towers shall be used for stringing of the transmission line under present scope and the bottom two circuits shall be made available for stringing of any future transmission line of any transmission service providers/ State transmission utilities/Central transmission utilities passing through the same protected area. Further, the configuration and coordinates of such transmission towers shall be submitted to STU/CTU and BPC by the TSP.

A.20.0 The TSP shall abide by the Guidelines of CEA w.r.t. shifting of transmission lines for NHAI projects and other projects.

A.21.0 Safety precautions in regard to gas/oil pipe lines in vicinity of Transmission lines shall be taken in coordination with gas/ petroleum authorities.

B. SPECIFIC TECHNICAL REQUIREMENTS FOR SUBSTATION

The proposed 400/220/132kV Sakoli S/s shall be AIS generally conforming to the requirements of CEA (Technical Standards for Construction of Electrical Plants and Electric Lines) Regulations 2022, as amended from time to time.

Other CEA Regulations/guidelines as amended up to date and MoP guidelines, as applicable, shall also be followed.

LOCATION DETAILS OF EXISTING / PROPOSED SUBSTATIONS:

a) 400/220/132 kV AIS Sakoli (Proposed) - New substation which is to be implemented under present scheme. : Lattitude-20°57'24.19"N, Longitude-79°50'34.72"E

b) 132 kV Sakoli (Existing) : Latitude- 21°05'24.9"N, Longitude-80°00'02.2"E

c) 132 kV Morgaon Arjuni (Existing): Latitude-20°49'09.3"N, Longitude-80°00'56.2"E

Note: *The above coordinates/location of substation indicated is approximate in the substation area. Exact coordinates for the corresponding bays/gantry for termination of the respective line may be verified and finalized in coordination with actual site.*

Other CEA Regulations/guidelines as amended up to date and MoP guidelines, as applicable, shall also be followed.

B.1.0 Salient features of Substation Equipment and Facilities

The design and specification of substation equipment are to be governed by the following factors:

B.1.1 Insulation Coordination

The system design parameters for substations/switchyards shall be as given below:

Sl. No	Description of Parameters	400/220/132 kV Sakoli		
		400 kV System	**220 kV System**	**132 kV System**
1.	System Operating Voltage	400 kV	220 kV	132 KV
2.	Maximum voltage of the system (rms)	420 kV	245 kV	145KV
3.	Rated Frequency	50 Hz	50 Hz	50 Hz
4.	No. of Phases	3	3	3
5.	Rated Insulation Levels			

Sl. No	Description of Parameters	400/220/132 kV Sakoli		
		400 kV System	**220 kV System**	**132 kV System**
i)	Lightning Impulse withstand voltage for (1.2/50 micro sec.) - for Equipment other than Transformer and Reactors - for Insulator String	1425 kVp 1550 kVp	1050 kVp 1050 kVp	650 kVp 650 kVp
ii)	Switching Impulse withstand voltage (250/2500 micro sec.) dry and wet	1050 kVp	460 kVp	-
iii)	One minute power frequency dry withstand voltage (rms)	630 kV		
iv)	One minute power frequency dry and wet withstand voltage (rms)			
6.	Corona Extinction Voltage	320 kV	156 kV	105 kV
7.	Max. radio interference voltage for frequency between 0.5 MHz and 2 MHz	1000 micro-volts at 266 kV rms	1000 micro-volts at 156 kV rms	1000 micro- volts at 266 kV rms
8.	Minimum creepage distance for insulator string/ longrod insulators/ outdoor bushings	13020 mm (31 mm/kV)	7595 mm (31 mm/kV)	4495mm (31 mm/kV)
9.	Minimum creepage distance for switchyard equipment	10500 mm (25 mm/kV)	6125 mm (25 mm/kV)	3625mm (25 mm/kV)
10.	Max. Fault Current	63 kA	50 kA	40KA
11.	Duration of fault	1 sec	1 Sec	1 sec

B.1.2 Switching Scheme

The switching schemes, as mentioned below, shall be adopted at various voltage levels of substation/switchyard:

Voltage/Type of Substation AIS	400 kV	220 kV	132 kV
400/220/132 kV Sakoli	One and Half breaker	Double main and Transfer	Double Main and Transfer

Notes: -

i) *For one and half breaker switching scheme, any double circuit line consisting of two numbers feeders and originating from the same transmission or generating switchyard shall not be terminated in one diameter.*

ii) *Two transformers of same HV rating shall not be connected in the same diameter and similarly two bus reactors of same HV rating shall also not be connected in the same diameter.*

iii) *A diameter in one and half breaker scheme is a set of 3 circuit breakers with associated isolators, earth switches, current transformers etc. for controlling of 2 numbers feeders.*

iv) *Connection arrangement of Switchable Line reactors shall be such that it can be used as Line reactor as well as Bus reactor with suitable NGR bypass arrangement.*

v) *Space for 400 kV, 220 kV & 132 kV future line bays shall be kept considering provision of switchable line reactors*

vi) *TSP shall plan distribution of line and transformer feeders to bus bar in such a way that all power can be evacuated successfully without crossing thermal limit at any point of bus-bar.*

vii) *For AIS type substation, TSP shall keep space provisions for future elements such that interconnection arrangement to the corresponding future bays can be done with overhead AIS type connection without any cable/ GIS duct.*

viii) *TSP shall plan connectivity of lines and transformers to bus bar in such a way that all power can be evacuated successfully without crossing the thermal limit at any point.*

ix) ***400/220/132 kV AIS Sakoli*** *:*

400 kV bay configurations (one and half breaker scheme) shall be as follows:

Configuration	Number of Bays (1-1/2 CB system)
a) ICT bay- Tie- Line bay b) Bus Reactor – Tie- future space* c) Space Provision for Future ICT* – Tie- future Space*	4 (four) 1 (One) 1 (One)

220 kV bay configurations (Double main & Transfer bus scheme) shall be as follows:

Configuration	Number of Bays (Double Main & Transfer bus System)
Main–I ICT Bay Line Bay main –II ICT Bay Line Bay	 01 No. 01 No. 01 No. 01 No.

132 kV bay configurations (Double main bus scheme) shall be as follows:

Configuration	Number of Bays (Double Main bus System)
Main Bus-I a) ICT Bay b) 132 kV line bays c) Space provision for Future ICT* Main Bus-II d) ICT Bay e) 132 kV line bays	 1 (One) 3 (Three) 1 (One) 1 (One) 3 (Three)

B.2.0 Substation Equipment and facilities (Voltage level as applicable):

The switchgear shall be designed and specified to withstand operating conditions and duty requirements. All equipment shall be designed considering the following capacity.

Sl.No	Description of bay	400/220/132 kV Sakoli		
		400 kV	**220 kV**	**132 KV**
1.	Bus Bar	4000 A	3000 A	3000 A
2.	Line bay	3150 A	1600 A	2000 A
3.	ICT bay	3150 A	1600 A	2000 A
4.	Bus Reactor Bay	3150 A	N/A	N/A
5.	Bus Coupler Bay	N/A	3000 A	3000 A
6.	Transfer Bus coupler bay	N/A	1600 A	2000 A

B.2.1 Power Transformers

B.2.1.1 Autotransformer

500 MVA, 400 /220 kV and 315 MVA, 400/132 kV, 3-Phase Auto Transformer shall conform to CEA's "Standard Specifications and Technical Parameters for Transformers and Reactors (66 kV and above)" available on CEA website.

B.2.2 Shunt Reactors

B.2.2.1 420 kV, 3-Phase, Shunt Reactor

125 MVAR, 420 KV, 3-Phase Reactor shall conform to CEA's "Standard Specifications and Technical Parameters for Transformers and Reactors available on CEA website.

B.2.3 400 kV, 220 kV and 132kV AIS Substation equipment (as applicable)

B.2.3.1 Circuit Breakers (AIS)

The circuit breakers and accessories shall conform to IEC: 62271-100, IEC: 62271-1 and shall be of SF6 Type. The circuit breakers shall be of class C2-M2 (as per IEC) with regard to restrike probability during capacitive current breaking and mechanical endurance. The rated break time shall not exceed 40 ms for 400 (420) kV circuit breakers, 60 ms for 220 kV &132 kV circuit breakers. 400 (420) kV and 220 kV Circuit breakers shall be provided with single phase and three phase auto reclosing. Each breaker would have two sets of trip circuits which would be connected to separate DC supplies for greater reliability. The Circuit breakers controlling 400 kV lines shall be provided with pre insertion closing resistor of about 400 ohms with 8 ms insertion time or Controlled Switching Device (CSD) for lines longer than 200 km. The short line fault capacity shall be same as the rated capacity and this is proposed to be achieved without use of opening resistors. The controlled switching device shall be provided in Circuit breakers of switchable line reactor bay and in Main and Tie bay circuit breakers of line with non-switchable line reactors, Bus reactors and Transformers of voltage class 400 kV and above.

B.2.3.2 Isolators (AIS)

The isolators shall comply with IEC 62271-102 in general. 400 kV and 220 kV isolators shall be double break type. All Isolators and earth switches shall be motor operated. Earth switches shall be provided at various locations to facilitate maintenance. Isolator rated for 400 kV, 220 kV,132 kV shall be of extended mechanical endurance class - M2 as per IEC-62271-102. Isolator rated for 220 kV shall be suitable for bus transfer current switching duty as per IEC-62271-102. Main blades and earth blades shall be interlocked and interlock shall be fail safe type. 400 kV, 220 kV, 132 kV earth switch for line isolator shall be suitable for induced current switching duty as defined for Class-B.

B.2.3.3 Current Transformers (AIS)

Current Transformers shall comply with IEC 61869 in general. All ratios shall be obtained by secondary taps only. Generally, Current Transformers (CT) for 400 kV shall have six

cores (four for protection and two for metering) and 220 kV Current Transformers shall have five cores (four for protection and one for metering). The burden and knee point voltage shall be in accordance with the requirements of the system including possible feeds for telemetry. The accuracy class for protection core shall be PX and for metering core it shall be 0.2S. The rated burden of cores shall be closer to the maximum burden requirement of metering and protection system (not more than 20 VA for metering core) for better sensitivity and accuracy. The instrument security factor shall be less than 5 for CTs up to 400 kV voltage class.

B.2.3.4 Capacitive Voltage Transformers (AIS)

Capacitive Voltage Transformers shall comply with IEC 61869 in general. These shall have three secondaries out of which two shall be used for protection and one for metering. The accuracy class for protection cores shall be 3P and for metering core shall be 0.2. The Capacitive Voltage Transformers on lines shall be suitable for Carrier Coupling. The Capacitance of CVT for 400 kV and 220 kV shall be of 4400/8800 pF depending on PLCC requirements. The rated burden of cores shall be closer to the maximum burden requirement of metering and protection system (not more than 50 VA for metering core) for better sensitivity and accuracy.

B.2.3.5 Surge Arresters (AIS)

336 kV Station High (SH) duty and 216 kV Station Medium (SM) duty gapless type Surge Arresters with thermal energy (W_{th}) of minimum 12 kJ/kV and 7 kJ/kV conforming to IEC 60099-4 in general shall be provided for 400 kV and 220 kV systems respectively. Other characteristics of Surge Arrester shall be chosen in accordance with system requirements. Surge arresters shall be provided at line entrances near Transformers and Reactors so as to achieve proper insulation coordination. Surge Arresters shall be provided with porcelain/ polymer housing fitted with pressure relief devices. A leakage current monitor with surge counter shall be provided with each surge arrester.

B.2.4 Protection Relaying and Control System

The protective relaying system proposed to be provided for transmission lines, auto-transformers, reactors and bus bars to minimize the damage to the equipment in the events of faults and abnormal conditions, is dealt in this section. All main protective relays shall be numerical type with IEC 61850 (Edition-II) communication interface. All numerical relays shall have built in disturbance recording feature. The auto transformer protection should be provided with two no. differential relays of different make & algorithm.

The protection circuits and relays of transformer and reactor shall be electrically and physically segregated into two groups each being independent and capable of providing uninterrupted protection even in the event of one of the protection groups failing, to obtain redundancy, and to take protection systems out for maintenance while the equipment remains in service.

a) Transmission Lines Protection

400kV and 220kV lines shall have MAIN-I numerical four zones distance protection scheme with carrier aided inter-tripping feature. The fourth zone shall be the reverse zone. 400 kV and 220 kV lines shall also have MAIN-II numerical distance protection scheme like Main-I but from different make that of MAIN-I. 132kV lines shall have MAIN-I numerical four zones distance protection scheme with carrier aided inter-tripping feature. The fourth zone shall be the reverse zone. 132 kV lines shall also have independent back up over current & earth fault protection. However, Line Current Differential relay (with back up distance protection feature) as Main–I & Main-II may be considered, for short lines (line length less than 10 KM) having Fibre Optic communication link for which line differential relay have to be arrange by Transmission Service Provider (TSP) for remote end also. In case of loop in loop out of transmission lines, the existing protection scheme shall be studied and suitable up-gradation (if required) shall be carried out. The Main-I and Main-II protection relays of same make may be provided only if they are of different hardware, manufacturing platform or different principle of operation. Associated power & control cabling and integration with SAS at remote end shall be provided by respective bay owner. All 400kV lines shall also be provided with two stages over voltage protection. Further, all 400kV & 220kV lines shall be provided with single and three phase auto-reclosing facility to allow reclosing of circuit breakers in case of transient faults. 132kV lines should not have auto-reclosing facility. These lines shall also be provided with distance to fault locators to identify the location of fault on transmission lines.

Over voltage protection & distance to fault locator may be provided as in-built feature of Main-I & Main-II protection relays. Auto reclose as built in function of Bay Control Unit (BCU) is also acceptable.

The Main-I and Main-II protection relays shall be fed from separate DC sources and shall be mounted in separate panels. For 400kV, 220kV and 132kV transmission lines, directional IDMT earth fault relay should be provided as standalone unit or in-built feature of Main-I and Main -II feature.

b) Auto Transformer Protection

These shall have the following protections:

i) Numerical Differential Protection

(400/220 KV and 220/132 KV ICTs shall have two differential protection relays. The second differential relay shall be provided on IV side C&R panel to avoid congestion on HV side C&R panel. The differential relay shall have different make and algorithm.)

ii) Numerical Restricted Earth Fault Protection

iii) Numerical Back-up Directional Over-Current and Earth Fault Protection on High Voltage (HV) and Intermediate Voltage (IV) side

iv) Numerical Over Fluxing Protection on HV and IV side

v) Numerical Overload Alarm

Further, numerical back-up over-current and earth fault protection on HV and IV side of autotransformer shall not be combined with other protective functions in the main relays

and shall be independent relays. Besides these, power transformers shall also be provided with Buchholz relay, Magnetic Oil Gauge (MOG) with low oil level alarm, protection against high oil and winding temperature and pressure relief device etc.

Suitable monitoring, control (operation of associated circuit breaker and isolator) and protection for LT auxiliary transformer connected to tertiary winding of auto-transformer for the purpose of auxiliary supply shall be provided. The over current and other necessary protection shall be provided for the auxiliary transformer. These protection and control may be provided as built in feature either in the bay controller to be provided for the auxiliary system or in the control and protection IEDs to be provided for autotransformer.

c) 400 kV Reactor Protection

Reactor shall be provided with the following protections:

i) Numerical Differential Protection.

ii) Numerical Restricted Earth Fault Protection

iii) Numerical Back-up Impedance Protection

Besides these, reactors shall also be provided with Buchholz relay, Magnetic Oil Gauge (MOG) with low oil level alarm, protection against oil and winding temperatures and pressure relief device, etc.

d) Bus Bar Protection

The high speed low impedance type bus bar differential protection, which is essential to minimize the damage and maintain system stability at the time of bus bar faults, shall be provided for 400 kV, 220 and 132 kV buses. Duplicated bus bar protection is envisaged for 400 kV bus-bar protection. Bus bar protection scheme shall be such that it operates selectively for each bus and incorporates the necessary features required for ensuring security.

Bus Bar protection system for new substation shall be de-centralized (distributed) type.

The scheme shall have complete bus bar protection for present as well as envisaged future bays i.e. input / output modules for future bays for the bus sections under present scope and PUs shall be provided by the respective bay owners.

In case the bus section is provided, then each side of bus section shall have separate set of bus-bar protection schemes.

For existing substations, the existing bus bar protection shall be augmented as per requirement.

e) Local Breaker Back-up Protection

This shall be provided for each 400 kV , 220kV and 132 kV circuit breakers and will be connected to de-energize the affected stuck breaker from both sides.

Notes:

1. *LBB and REF relays shall be provided separately from transformer differential relay.*
2. *LBB relay may also be provided as built-in protection function of distributed bus bar protection scheme; however, in such case separate LBB relay shall be provided for tie bays (in case of One and Half breaker scheme).*
3. *Over fluxing and overload protection can be provided as built-in feature of differential relay.*
4. *In 400 kV switchyard, if spare bay of half diameter is identified as future, Tie CB relay panel shall be with Auto-reclosure feature.*

B.2.5 Substation Automation System

a) For all the new substations, state of art Substation Automation System (SAS) conforming to IEC-61850 shall be provided. The distributed architecture shall be used for Substation Automation System, where the controls shall be provided through Bay control units. The Bay control unit is to be provided bay wise for voltage level 400 kV,220 kV & 132 kV and above. All bay control units as well as protection units are normally connected through an Optical fiber high speed network. The control and monitoring of circuit breaker, dis-connector, re-setting of relays etc. can be done from Human Machine Interface (HMI) from the control room.

The functions of control, annunciation, disturbance recording, event logging and measurement of electrical parameters shall be integrated in the Substation Automation System.

At new substations, the Substation Automation System (SAS) shall be suitable for the operation and monitoring of the complete substation including proposed future bays/elements.

In the existing substations with a Substation Automation System (SAS), augmentation of existing SAS shall be done for bays under the present scope.

In the existing Substations where substation automation is not provided, control functions shall be done through control panels.

Necessary gateway and modems (as required) shall be provided to send data to RLDC/SLDC as per their requirement and shall be provisioned with 2+2 redundancy i.e. 2 channels for Main Control Centre and 2 channels for Backup Control Centre. In order to meet this requirement, suitable redundancy at port and card level need to be ensured by the TSP to avoid any single point of failure which may lead to interruption in real-time grid operation. Accordingly, all the hardware for communication services of station as stated above shall support dual redundancy for data transmission of station to respective main and backup RLDCs. Any augmentation work at RLDC/SLDC is excluded from TSP's scope. However, all the configuration work at substation end required to send data to RLDC/SLDC shall be in the scope of TSP.

b) Time Synchronization Equipment

Time synchronization equipment complete in all respects including antenna, cable and processing equipment required to receive time signal through GPS or from National Physical Laboratory (NPL) through INSAT shall be provided at new substations. This equipment shall be used to synchronize SAS and IEDs etc.

B.3.0 Substation Support Facilities

Certain facilities required for the operation and maintenance of substations as described below shall be provided at the new substation. In existing substation, these facilities have already been provided and will be extended/ augmented as per requirement.

B.3.1 AC and DC power supplies

For catering the requirements of three phase and single phase AC supply and DC supply for various substation equipment (for present and future scope), the following arrangement is envisaged:-

(i) For LT Supply at each new Substation, two (2) Nos. of auxiliary Transformers (minimum 630 kVA for substations with highest voltage rating as 400 kV) shall be provided which shall be fed from two independent sources as per the CEA (Technical Standards for Connectivity to the Grid) Regulations, 2007.

Metering arrangement with Special Energy Meters (SEMs) shall be provided by TSP at 33 kV tertiary of Transformer for drawing auxiliary supply at new substation.Such SEMs shall be provided by STU at the cost of the TSP. Accounting of such energy drawn by the TSP shall be done by SLDC as part of Regional Energy Accounting.

Additionally, Active Energy Meters may be provided at the same point in the 33 kV tertiary of Transformer by local DISCOM for energy accounting.

(ii) 2 sets of 220 V battery banks for control and protection and 2 sets of 48 V battery banks for PLCC/ communication equipment shall be provided at each new Substation. Each battery bank shall have a float-cum-boost charger.

At new substation, sizing of 220 V battery and battery charger shall be done based on the number of bays specified (including future bays) as per CEA Regulations and relevant IS. Two (2) sets of 48 V battery banks for PLCC and communication equipment for present and future scope shall be provided at each new Substation with at least 10-hour battery backup and extended backup, if required. 48 V DC can be achieved from 220 V DC battery bank using adapter, if so desired by TSP, without compromising backup time.

(iii) Suitable AC and DC distribution boards and associated LT Switchgear shall be provided at new substation.

For new substation, following switch boards shall be considered with duplicate supply with bus coupler/ sectionalizer and duplicate outgoing feeders except for Emergency lighting distribution board which shall have only one incoming feeder:

(a) 415 V Main Switch board – 1 No.
(b) AC distribution board – 1 No.
(c) Main lighting distribution board – 1 No.
(d) Emergency lighting distribution board – 1 No.
(e) 220 Volt DC distribution board – 2 Nos.
(f) 48 Volt DC distribution board – 2 Nos.

Sizing of LT Switchgear shall be suitable to cater the requirement for all present and future bays. AC and DC distribution boards shall have equipped modules for all the feeders (including future as specified).

(iv) At new Substation, one No. of DG set (minimum 250 kVA for substations with highest voltage rating as 400 kV) shall be provided for emergency applications.

(v) At new substation, sizing of battery and battery charger shall be done based on the number of bays specified (including future bays).

(vi) For substation extensions, existing facilities shall be augmented as required.

B.3.2 Fire Fighting System

Fire-fighting system for substation including Transformer and Reactor shall conform to CEA (Measures Relating to Safety and Electric Supply) Regulations, 2023 as amended from time to time.

Further, adequate water hydrants and portable fire extinguishers shall be provided in the substations. The main header of the firefighting system shall be suitable for extension to bays covered under the future scope; necessary piping interface in this regard shall be provided.

At existing substations, the fire-fighting systems as available shall be extended to meet the additional requirements.

B.3.3 Oil Evacuating, Filtering, Testing and Filling apparatus

To monitor the quality of oil for satisfactory performance of transformers, shunt reactors and for periodical maintenance necessary oil evacuating, filtering, testing and filling apparatus would be provided at new substations. Oil storage tanks of adequate capacities for storage of transformer oil would be provided.

Online Transformer Oil Drying Out System shall be provided in line with the provisions of Standard Specification and Technical Parameters for Transformers and Reactors (66 kV and above Voltage Class) as amended up to date available on CEA website.

B.3.4 Illumination

Normal and emergency AC and DC illumination shall be provided adequately in the control room and other buildings of the substation. The switchyard shall also be provided

with adequate illumination.

The lighting of the entire control room building, fire-fighting pump house, other building (if any) and switchyard shall be done by LED based low power consumption luminaries.

B.3.5 Control Room

For the new substation, substation control room shall be provided to house substation work stations for station level control (SAS) along with its peripheral and recording equipment, AC and DC distribution boards, DC batteries and associated battery chargers, Fire Protection panels, Telecommunication panels and other panels as per requirements. Air conditioning shall be provided in the building as functional requirements. Main cable trenches from the control room shall have adequate space provision for laying of cables from the control room forall the future bays.

At existing substations, the adequacy of size of control room shall be ascertained and the same shall be augmented as per requirement.

B.3.6 Control Concept

All the EHV circuit breakers in substation/switching stations shall be controlled and synchronized from the switchyard control room/remote control center. All the isolators shall have control from remote/local whereas the earth switches shall have local control only.

B.3.7 Visual Monitoring System (VMS) for watch and ward of substation premises:

Visual Monitoring System for effective watch and ward of substation premises shall coverall the transformers and reactors, all other major AIS Equipment (such as CB, isolators, CT,CVT, SA etc. as applicable), panel room, all the gates of switchyard and all entry and exit points of control room building and accordingly the location of cameras shall be decided. In addition to the gates of the switchyard, the cameras shall also be located around the boundaries at suitable locations. The camera shall be high definition color CCD camera with night vision feature. The VMS data partly/completely shall be recorded (minimum for 15 days) at least @25fps (or better) and stored on network video recorder. The system shall use video signals from various cameras installed at different locations, process them for viewing on workstations/monitors in the control room and simultaneously record all the cameras. The VMS data should go only to the intended personnel/facility and not to the remote server of the Camera (VMS supplier).

Mouse/keyboard controllers shall be used for pan, tilt, zoom and other functions of the desired camera. The Visual Monitoring System shall have provision of WAN connectivity for remote monitoring.

All camera recordings shall have Camera ID and location/area of recording as well as date/time stamp. The equipment should generally conform to Electromagnetic compatibilityrequirement for outdoor equipment in EHV substation.

At existing substations, the visual monitoring system if available shall be augmented as per existing or better specification as required.

B.4.0 General Facilities

a) Line Gantry/Towers are envisaged for bays under the present scope only. However, for the adjacent future line bay, tower shall be designed for extension (considering Quad conductors for 400 kV future lines and Twin conductor for 220 kV future lines) wherever applicable.

b) Bay extension works at existing substation shall be executed by TSP in accordance with the requirements/provisions mentioned above. However, interface points shall be considered keeping in view the existing design/arrangement at the substation.

c) TSP has to arrange for construction power and water on its own.

d) All outdoor steel structures including anchor/foundation bolts shall be fully galvanized. The weight of the zinc coating shall be at least 610 g/m^2. However, for coastal/creek regions it shall be at least 900 g/m^2 (if applicable).

e) In 400 kV switchyard, if spare bay of half diameter is identified as future, all the equipment for Tie and Future bay shall be designed considering the current rating of line bay i.e. 3150 A.

f) Boundary wall shall be brick masonry wall with RCC frame or Stone masonry wall or Precast RCC wall under present scope along the property line of the complete substation area including future switchyard area to prevent encroachment and unauthorized access. The minimum height of the boundary wall shall be of 1.8 m from Finished Ground Level (FGL).

g) All electrical equipment shall be installed above the Highest Flood Level (HFL) and where such equipment is not possible to be installed above Highest Flood Level, it shall be ensured that there is no seepage or leakage or logging of water.

h) As per CEA Manual on Transmissions Planning criteria 2023, Line approaching substation shall normally be perpendicular to the substation boundary for a stretch of 2-3 kms. Accordingly, TSP shall ensure that line terminations at substations are arranged in a manner to avoid hindrance to future line terminations at the substations.

SPECIFIC TECHNICAL REQUIREMENTS FOR COMMUNICATION

The communication requirement shall be in accordance to CEA (Technical Standards for Communication System in Power System Operations) Regulations, 2020, CEA (Technical Standards for Construction of Electrical Plants and Electric Lines) Regulations, 2022, CERC (Communication System for inter-State transmission of electricity) Regulations, 2017, and CEA (Cyber Security in Power Sector) Guidelines, 2021, all above documents as amended from time to time.

The protections for transmission line and the line compensating equipment shall have hundred percent back up communication channels i.e. two channels for tele- protection in addition to one channel for speech plus data for each direction.

The communication services viz. SCADA, AGC (wherever applicable), VoIP, AMR and PMU have been identified as critical services and therefore shall be provisioned with 2+2 redundancy i.e. 2 channels for Main Control Centre and 2 channels for Backup Control Centre. In order to meet this requirement, suitable redundancy at port and card level need to be ensured by the TSP to avoid any single point of failure which may lead to interruption in real-time grid operation.
PMU to PDC communication (wherever required) shall be through 2 channels to the PDC (main) as there is no backup PDC at present.

Accordingly all the hardware for communication services of station as stated above shall support dual redundancy for data transmission of station to respective main and backup SLDCs/RLDCs.

The complete InSTS communication system commissioned by TSP under the RFP shall be the asset of InSTS and shall be available for usage of InSTS requirements as suggested by Maharashtra STU/CTU from time to time.

In order to meet the requirement for grid management and operation of substations, Transmission Service Provider (TSP) shall provide the following**:**

C.1.0 Establishment of 400/220/132 kV Sakoli with 2 x 500 MVA, 400/220 kV ICTs with 125 MVAr Bus Reactor at 400 kV Level

(I) TSP shall supply, install and commission 3 No. FODP (96F or higher) and 1 No. FODP (48F or higher) along with panel and approach Cable (48F each), Joint Box etc. with all associated hardware fittings from gantry tower to Control Room for all the incoming lines / Bays envisaged under the present scope.

(II) TSP shall supply, install and commission One or more STM-16 (FOTE) equipment along with panel/s supporting minimum Thirteen (13) directions with MSP (Multiplex Section Protection – 1+1). These directions shall exclude protected (1+1) local patching among equipment (if any). Communication Equipment shall be provided with necessary interfaces to meet the voice and data communication requirement among all remote end substations & 400/220 kV AIS Sakoli. The suitable DC Power Supply and backup to be provided for communication equipment.

(III) FODP and FOTE equipment with panels shall be provided in Control Room of 400/220/132 kV AIS Sakoli. FOTE and FODP Equipment can be accommodated in same panel to optimize space.

(IV) The new communication equipment under the present scope shall be compatible for integration with existing regional level centralized NMS. The local configuration of the new communication equipment shall be the responsibility of TSP. The configuration work in the existing centralized NMS for integration of new Communication equipment shall be done by Regional ULDC Team, however all the necessary support in this regard shall be ensured by TSP.

(V) TSP shall supply, install and commission Firewall in redundant mode (1+1) in line with the specification attached at **Annexure F.1**.

(VI) The maintenance of all the communication equipment and software thereof including FOTE, FODP, PMU, approach cable, DCPS along with Battery Bank and Firewall shall be the responsibility of TSP.

C.2.0 400/220/132 kV lines at 400/220/132 kV AIS Sakoli (New)

(i) 400/220/132 kV lines at at 400/220/132 kV AIS Sakoli (New), TSP shall supply, install and commission One (1) No. OPGW cable containing 48 Fibres (48F) on one E/W peak and conventional earth wire on other E/W peak.

(ii) The TSP shall install this OPGW from gantry of 400/220/132 kV Sakoli up to the gantry of all substations connected to the 400/220/132 kV Sakoli with all associated hardware including Vibration Dampers, mid-way and gantry Joint Boxes (called OPGW Hardware hereafter) and finally terminate in Joint Boxes at end Substations.

However, TSP shall finalize the requirement and location of repeater station depending upon the actual site conditions. Further TSP shall comply to the requirements mentioned as per **Appendix-F.1**

(iii) Maintenance of OPGW Cable and OPGW Hardware shall be responsibility of TSP.

C.3.0 FOTE requirement at 400/220/132 kV Lines

(I) TSP shall supply, install and commission 1 No. FODP (72F or higher) along with panel and required Approach Cable (48F) with all associated hardware fittings from gantry tower to Bay Kiosk and from the Bay Kiosk to Control room.

(II) TSP shall supply, install and commission One STM-16 (FOTE) equipment along with panel/s supporting minimum three (3) directions with MSP (Multiplex Section Protection – 1+1) with necessary interfaces to meet the voice and data communication requirement between 400/220/132kV lines at 400/220/132 kV Sakoli (New) The suitable DC Power Supply and backup to be provided for communication equipment.

(III) If required, FOTE/FODP panel shall be installed in the new Bay Kiosk (Switchyard Panel Room (SPR)). The FOTE under present scope shall be integrated by TSP with the existing FOTE at control room of Wardha (PG) and Raipur (PG) which shall be communicating with respective control center. If require, TSP to provide necessary FODP sub rack / Splice trays/ Patch cords etc. and optical interfaces/equipment in the existing FOTE/FODP panels in control room for integration with the existing FOTE for onwards data transmission.

In case spare optical direction is not available in the existing FOTE at the control room, the TSP shall coordinate with station owner to reconfigure the directions in existing FOTE at control room. Alternatively, The TSP may integrate the FOTE under the present scope with existing FOTE in the nearby Kiosk connected to the control room FOTE (if available with spare direction). For this purpose, TSP shall provide necessary FODP sub rack / Splice trays/ Patch cords etc. and suitable optical interfaces/ equipment in the existing FOTE/FODP panels in another Kiosk (SPR).

(IV) FOTE and FODP can be accommodated in same panel to optimize space.

(V) The maintenance of all the communication equipment and software thereof including FOTE, FODP, approach cable, PMU, DCPS along with Battery Bank shall be the responsibility of TSP.

C.4.0 Specific Requirement for Phasor Measurement Units (PMUs)

TSP shall supply, install and commission required No. of Phasor Measurement Units (PMUs) at all the locations under the scope this RFP as per CEA (Technical Standards for Construction of Electrical Plants and Electric Lines) Regulations, 2022 (along with all amendments if any), and all the applicable Regulations, Standards, Guidelines issued time to time. These PMUs shall be provided with GPS clock and LAN switch and shall connect with LAN switch of control room of respective substations/ generating stations with Fibre Optic cable. These PMUs shall be connected with the FOTE at Substation/ generating stations for onwards data transmission to the PDC (Phasor Data Concentrator) located at respective RLDC. Configuration work in existing PDC at RLDC for new PMU integration shall be done by respective RLDC, however all the necessary support in this regard shall be ensured by TSP. The maintenance of all the PMUs and associated equipment shall be the responsibility of TSP.

Annexure-F.1

Next Generation Firewall (NGFW)

TSP shall provide 2 NGFW one in Main and another in Standby mode having electrical ethernet interfaces/ports and placed between FOTE and SAS gateway/s at the substation. All ethernet based applications shall be terminated in the firewall ports directly (e.g. PMU, AMR, VOIP, SAS/SCADA etc.). Each port of firewall shall work as a separate zone. Firewall shall be hardware based with features of Block/Allow/drop and IPSec VPN (network encryption).

The number of ports/interfaces in each firewall (i.e. Main and Standby) shall be minimum 16 Nos. TSP shall provide either single firewall or multiple firewalls to meet this interfaces requirement, each for main as well as standby firewall. Minimum throughput of firewall shall be 300 Mbps.

The Firewall shall be managed/ configured as standalone at present and shall also have compatibility to manage/configure through Centralized Management Console (CMC) remotely in future.

Firewall shall be tested and certified for ISO15408 Common Criteria for least EAL4+. Further, the OEM must certify that it conforms to Secure Product Development Life Cycle requirements as per IEC62443-4-1. The firewall shall generate reports for NERC-CIP Compliance.
The specifications for the firewalls are given at **Annexure-F.2** and schematic diagram showing firewall placement given at **Figure F.2**.

Annexure-F.2

Specifications of Next Generation Firewall (NGFW)

1. NGFW shall have following features including but not limited to:
   Encryption through IPSec VPN (Virtual Private Network), Deep Packet Inspection (DPI), Denial of service (DoS) and Distributed Denial of Service (DDoS) prevention, Port Block/ Allow, rules/ policies for block/allow, IP (Internet Protocol) and Media Access Control (MAC) spoofing protection, threat detection, Intrusion Prevention System (IPS), Anti-Virus, Anti-Spyware, Man In The Middle (MITM) attack prevention.
2. The proposed firewall shall be able to handle (alert, block or allow) unknown /unidentified applications e.g. unknown TCP and UDP packets. It shall have the provision to define application control list based on application group and/or list.
3. Firewall shall have feature and also have capability to update the definition/ Signatures of Anti-Virus online as well as offline. Firewall shall also be compatible to update the definitions/signatures through CMC. There shall be a defined process for security patching and firmware up-gradation. There shall be a feature to field validate firmware checksum. The same shall also be validated before using the OEM provided file/binary in the process of firmware up-gradation and security patching
4. Firewall shall have Management Console port to configure remotely.
5. Firewall shall be EMI/EMC compliant in Substation environment as per IEC 61850-3.
6. Firewall shall be rack mounted in existing standard equipment cabinets.
7. Firewall shall have support of SCADA applications (IEC-60870-5-104), ICCP, PMU (IEEE C37.118), Sub-Station Automation System (IEC 61850), Ethernet and other substation environment protocols.
8. Client based Encryption/ VPN must support different Operating System platforms e.g. Windows, Linux and Mac.
9. The solution must have content and comprehensive file detection policies, blocking the files as function of their types, protocols and directions.
10. Firewall shall have logging facility as per standard logs/events format. Firewall shall have features to export the generated/stored logs/events in csv (Comma Separated Value) and also any other standard formats for offline usage, analysis and compliance. Firewall shall have suitable memory architecture and solution to store and be enable to export all logs/events for a period of last 90 days at any given time.
11. Firewall shall have features and be compatible with local as well as central authentication system (RADIUS, LDAP, or TACACS+) for user account and access right management. It shall also have Role Based User management feature.
12. Firewall shall have the capability to configure sufficient number of VLANs.
13. Firewall shall have the capability to support sufficient number of sessions.
14. Firewall shall have provision to configure multiple IP Sec VPNs, at least 100 Nos., (one-to-many or many-to-one). Shall support redundant operation with a similar router after creation of all the IP Sec VPN. IPSec VPN shall support encryption protocols as AES128, AES256 and hashing algorithms as MD5 and SHA1. IPSec VPN throughput shall support at least 300 Mbps

15. Firewall shall be capable of SNMP v3 for monitoring from Network Management system. It shall also have SNMPv3 encrypted authentication and access security
16. Firewall shall support in Active/Passive or Active-Active mode with High Availability features like load balancing, failover for firewall and IPsec VPN without losing the session connectivity.
17. Firewall should have integrated traffic shaping (bandwidth, allocation, prioritisation, etc.) functionality
18. Shall support simultaneous operation with both IPv4 and IPv6 traffic
19. Firewall shall be compatible with SNTP/NTP or any other standards for clock synchronization
20. Firewall shall have the features of port as well as MAC based security
21. Firewall shall support exporting of logs to a centralized log management system (e.g. syslog) for security event and information management.
22. Firewall time shall be kept synchronised to official Indian Timekeeping agency, time.nplindia.org.
23. Firewall product shall be provided with all applicable updates at least until 36 months since the applicable date of product shipping to the concerned utility.

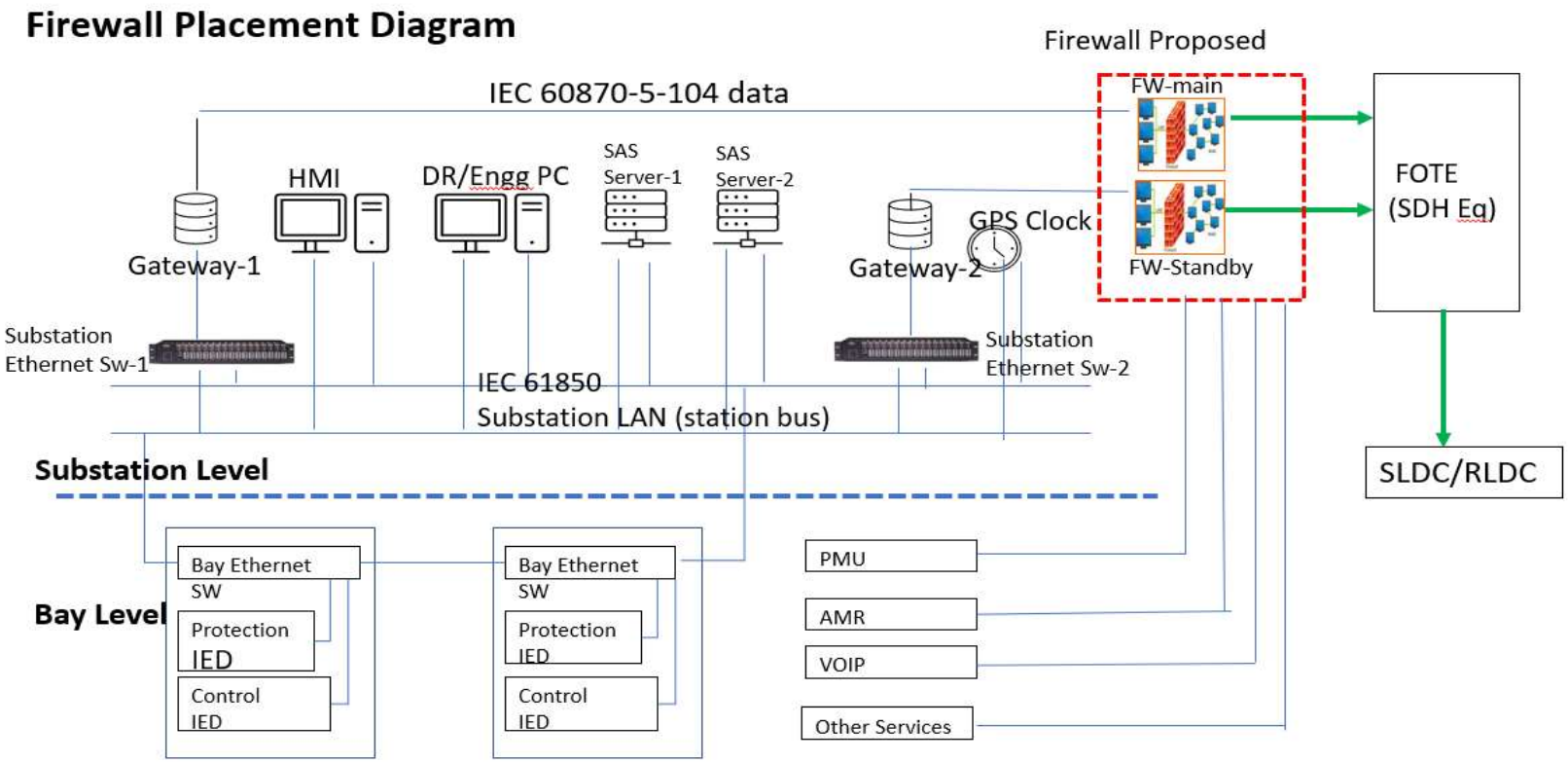
Firewall Placement Diagram
Firewall Proposed
IEC 60870-5-104 data
FW-main
FW-Standby
FOTE
(SDH Eq)
SLDC/RLDC
HMI
DR/Engg PC
SAS
Server-1
SAS
Server-2
GPS Clock
Gateway-1
Gateway-2
Substation
Ethernet Sw-1
Substation
Ethernet Sw-2
IEC 61850
Substation LAN (station bus)
Substation Level
Bay Level
Bay Ethernet
SW
Protection
IED
Control
IED
Bay Ethernet
SW
Protection
IED
Control
IED
PMU
AMR
VOIP
Other Services

Figure F2

Annexure F.3

C.5.0 PLCC and PABX:

Power Line Carrier Communication (PLCC) equipment complete for speech, tele-protection commands and data channels shall be provided on each transmission line. The PLCC equipment shall in brief include the following:

(i) Coupling device, Coupling filters, line traps, carrier terminals, protection couplers, HF cables, PABX (if applicable) and maintenance and testing instruments.

(ii) At new substation, a telephone exchange (PABX) of 48 lines shall be provided at as means of effective communication among various buildings of the substation, remote end substations and with control centres (RLDC/SLDC) etc.

(iii) Coupling devices shall be suitable for phase-to-phase coupling for 400 kV Transmission lines. The pass band of coupling devices shall have sufficient margin for adding communication channel in future if required. Necessary protection devicesfor safety of personnel and low voltage part against power frequency voltages and transient over voltage shall also be provided.

(iv) The line traps shall be broad band tuned suitable for blocking the complete range of carrier frequencies. Line Trap shall have necessary protective devices such as lightning arresters for the protection of tuning device. Decoupling network consisting of line traps and coupling capacitors may also be required at certain substation in caseof extreme frequency congestion.

(v) The carrier terminals shall be of Single Side-Band (SSB) Amplitude Modulation (AM) type and shall have 4 kHz band width. PLCC Carrier terminals and Protection couplers shall be considered for both ends of the line.

(vi) PLCC equipment for all the transmission lines covered under the scheme (consisting of one set of analog PLCC channel along with circuit protection coupler and one setof Digital protection coupler for both ends) shall be provided by TSP. PLCC to be provided for following lines under present scope:

Sl. No	Line name	PLCC configuration
1	All 400/220/132 transmission lines at 400/220/132 kV Sakoli (New)	1 set Analog PLCC + 1 set Digital Protection Coupler for each circuit at both ends.

Further, CVT and Wave trap for all 400 kV and 220 kV line bays under present scope shall be provided by TSP.

(vii) All other associated equipment like cabling, coupling device and HF cable shall also be provided by the TSP.

(viii) 2 sets of 48V battery banks for PLCC and communication equipment shall be provided at each new Substation with at least 10 hours battery backup and extended backup, if required.