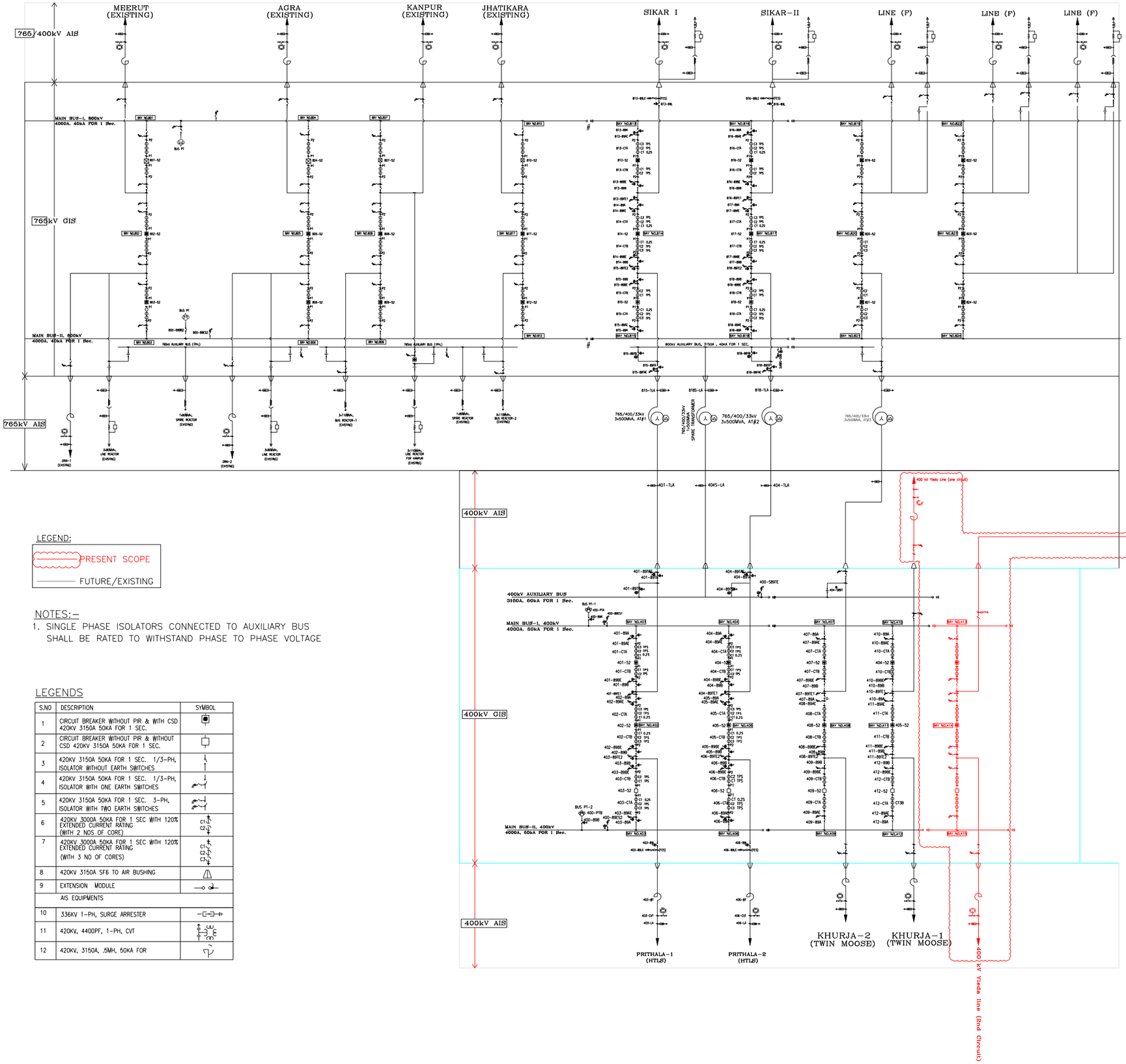

LEGEND:

PRESENT SCOPE

FUTURE/EXISTING

NOTES:-

1. SINGLE PHASE ISOLATORS CONNECTED TO AUXILIARY BUS SHALL BE RATED TO WITHSTAND PHASE TO PHASE VOLTAGE

LEGENDS

S.NO	DESCRIPTION	SYMBOL
1	CIRCUIT BREAKER WITHOUT PIR & WITH CSD 420KV 3150A 50KA FOR 1 SEC.	
2	CIRCUIT BREAKER WITHOUT PIR & WITHOUT CSD 420KV 3150A 50KA FOR 1 SEC.	
3	420KV 3150A 50KA FOR 1 SEC. 1/3-PH, ISOLATOR WITHOUT EARTH SWITCHES	
4	420KV 3150A 50KA FOR 1 SEC. 1/3-PH, ISOLATOR WITH ONE EARTH SWITCHES	
5	420KV 3150A 50KA FOR 1 SEC. 3-PH, ISOLATOR WITH TWO EARTH SWITCHES	
6	420KV 3000A 50KA FOR 1 SEC WITH 120% EXTENDED CURRENT RATING (WITH 2 NOS OF CORE)	C1 C2
7	420KV 3000A 50KA FOR 1 SEC WITH 120% EXTENDED CURRENT RATING (WITH 3 NO OF CORES)	C1 C2 C3
8	420KV 3150A SF6 TO AIR BUSHING	
9	EXTENSION MODULE	
	AIS EQUIPMENTS	
10	336KV 1-PH, SURGE ARRESTER	
11	420KV, 4400PF, 1-PH, CVT	
12	420KV, 3150A, .5MH, 50KA FOR	

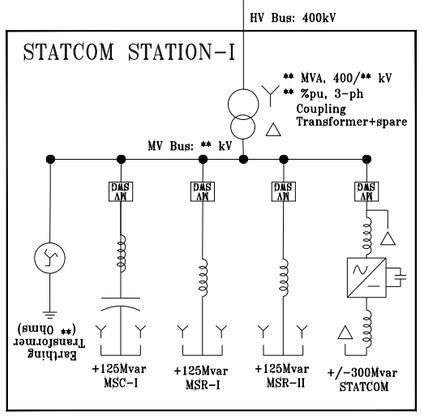

POWER GRID CORPORATION OF INDIA LIMITED

(A Government of India Enterprise)

SUBSTATION: 765/400kV ALIGARH GIS (EXTN.) SIBSTATION

TITLE : SINGLE LINE DIAGRAM

DATE	DRAWN BY	DRAWING NO.	REV.
Nov 2026		C/ENGG-SS/NR/ALIGARH/EXTN./SLD/1	00

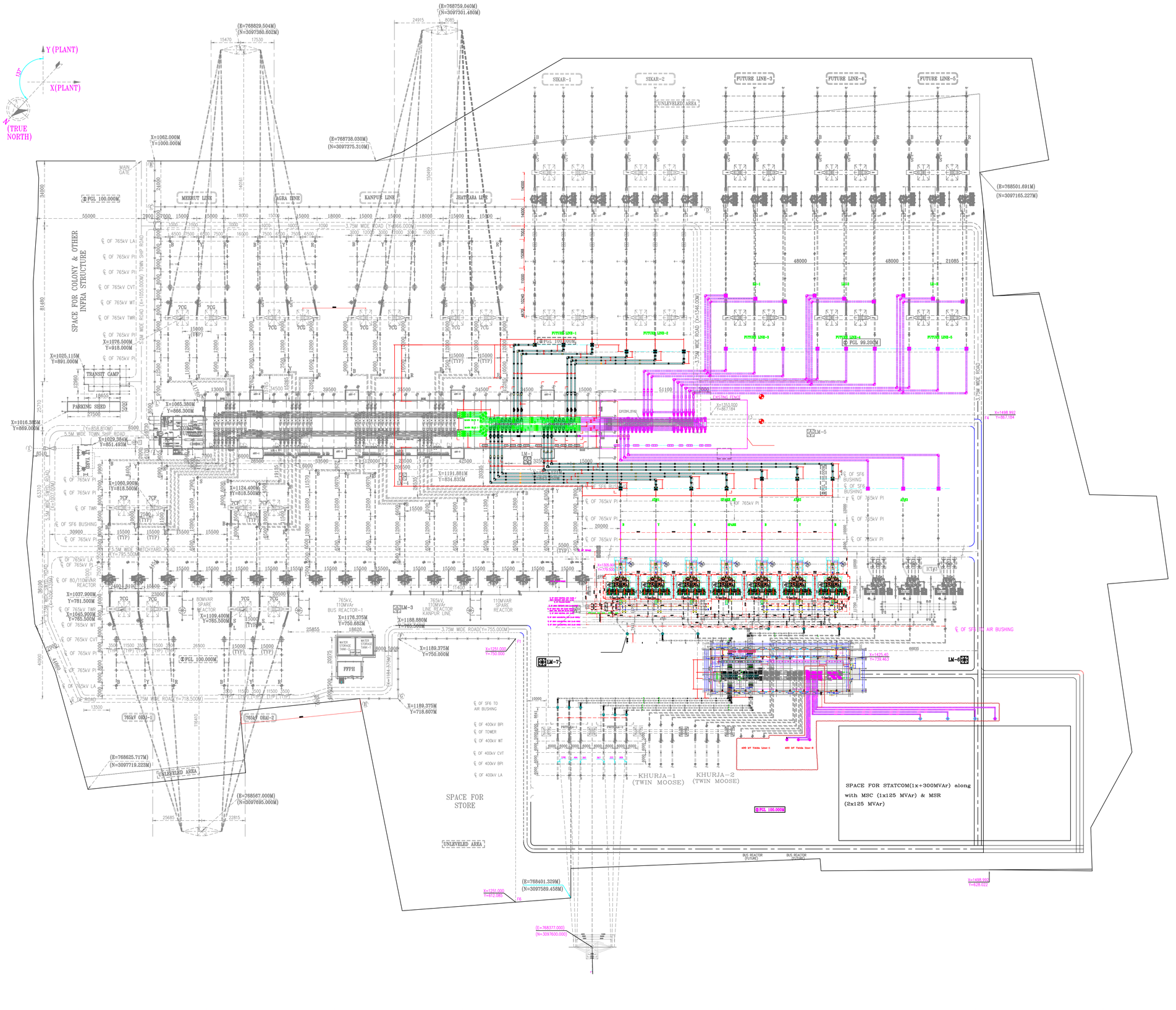

POWER GRID CORPORATION OF INDIA LIMITED

(A Government of India Enterprise)

SUBSTATION:
765/400kV ALIGARH GIS (EXTN.) SIBSTATION

TITLE :
GENERAL ARRANGEMENT LAYOUT

DATE	DRAWN BY	DRAWING NO.	REV.
April 2026		C/ENGG-SS/NR/ALIGARH/EXTN./GA/1	00

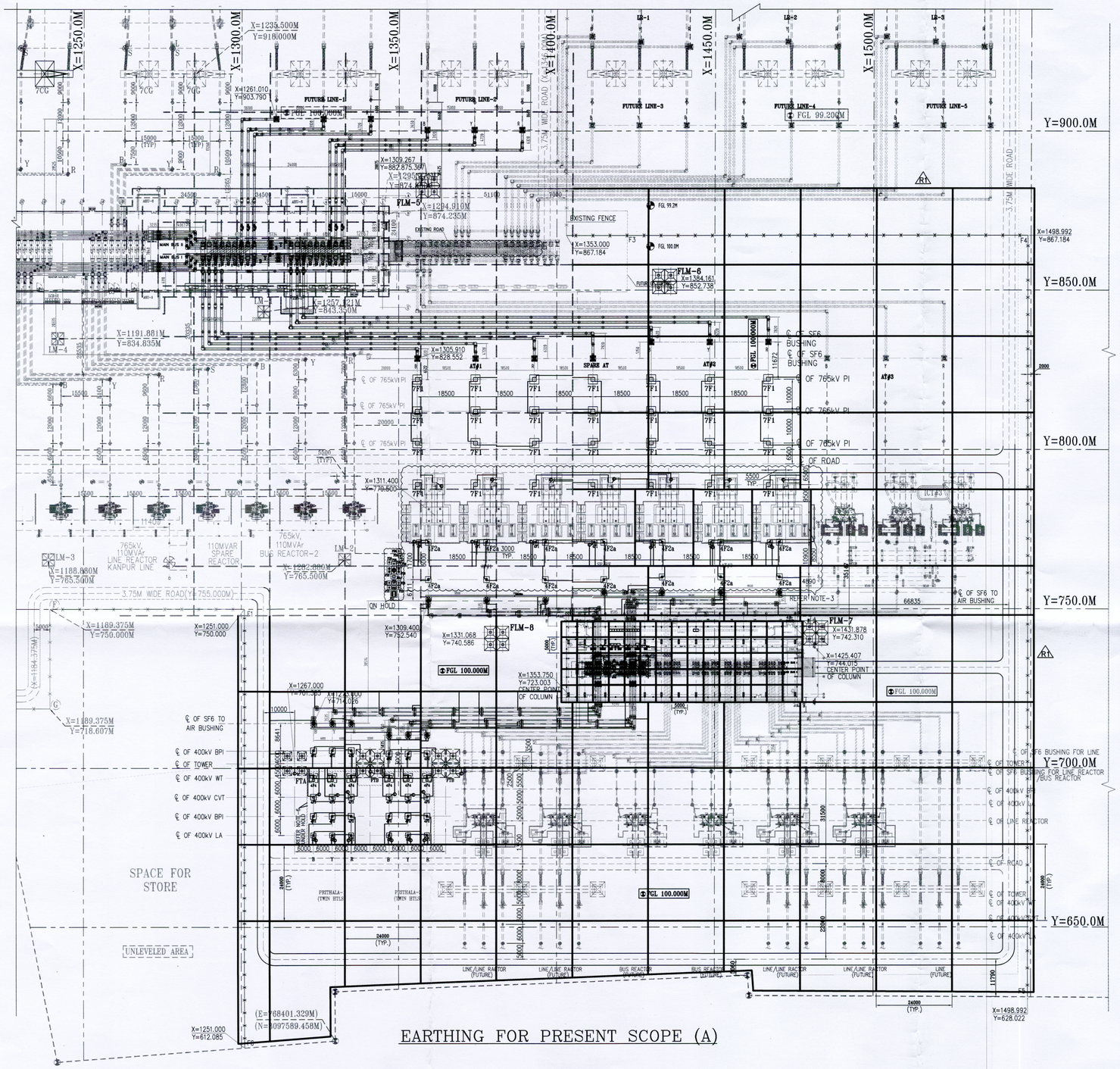

EARTHING FOR PRESENT SCOPE (A)

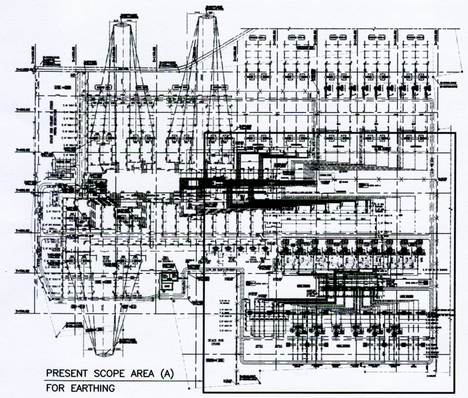

KEY PLAN

NOTES:–

1. ALL DIMENSIONS ARE IN MM, UNLESS STATED OTHERWISE.
2. THIS DRAWING IS PREPARED TO FINALIZE THE LOCATION FOR LAYING OF MAIN EARTHMAT. ITS CONSIDERED THAT THE MAIN EARTHMAT IS ALREADY PRESENT IN THE SUBSTATION AND THUS NEW MAIN EARTHMAT IS DRAWN IN EXTENSION OF EXISTING EARTHMAT.
3. THE LOCATION OF LIGHTNING MASTS MAY VARY AS PER APPROVED DSLP LAYOUT.
4. THE EARTHMAT ADJACENT TO TRANSFORMER AND ITS AUXILIARY EQUIPMENTS ARE TENTATIVE AND MAY VARY AFTER RECEIVING OF APPROVED TRANSFORMER WITH AUX. EQUIPMENT FOUNDATION DRAWINGS FROM TRANSFORMER MANUFACTURER/PGCIL.
5. EARTHING POINTS OF GIS BUS DUCTS WILL BE SHOWN ONCE THE STRUCTURE DETAILS OF GIS DUCTS WILL BE FINALIZED.
6. EARTHING CONDUCTOR FOR CABLE TRENCHES AND JUNCTION BOXES SHALL BE CONSIDERED IN NEXT DOCUMENT REVISION.
7. FOR FOUNDATIONS REFER FOUNDATION AND CABLE TRENCH LAYOUT & INDIVIDUAL EQUIPMENTS FOUNDATION DRAWINGS.
8. EARTHING CONDUCTOR RUNNING UNDER THE CABLE TRENCH, PIPES ETC. SHALL BE LAID MINIMUM 300mm. BELOW THEM.
9. FOR EQPT, STRUCTURE AND FENCING EARTHING DETAILS REFER STANDARD EARTHING DETAILS.
10. EARTHING OF 765/400kV AUTOTRANSFORMER AND ITS ASSOCIATED AUX. ARRANGEMENT IS NOT IN KEC SCOPE.
11. DISTANCE OF EARTHING GRID FROM FOUNDATION SHALL BE MINIMUM AS POSSIBLE.
12. WHEREVER EARTHING CONDUCTORS CROSS CABLE TRENCHES, UNDERGROUND SERVICE DUCTS, PIPES, TUNNELS, RAILWAY TRACKS ETC., IT SHALL BE LAID ATLEAST 300MM BELOW THEM AND SHALL BE RE-ROUTED IN CASE IT FOULS WITH EQUIPMENT/STRUCTURE FOUNDATIONS. LA and Tower with track
13. LA & CVT, EARTHING TO BE DONE THROUGH SEPARATE EARTH ROD ELECTRODE & CONNECTED TO THE NEAREST GRID.
14. FINAL LOCATION OF EARTH PIT/ ELECTRODE SHALL BE DECIDED AT SITE, ONLY TENTATIVE LOCATIONS ARE SHOWN IN THE DRAWING.
15. THE EARTHING INSTALLATION WORK SHALL CONFIRM TO THE REQUIREMENTS OF THE LATEST EDITION OF INDIAN ELECTRICITY RULES AND CODE OF PRACTICE FOR EARTHING IS:3043.
16. ALL EARTHING CONNECTIONS SHALL BE FOLLOWED AS PER PGCIL STANDARD EARTHING PHILOSOPHY AND SPECIFICATION REQUIREMENTS.
17. ALL EQUIPMENT SHALL BE EARTHED AT TWO POINTS WITH 75X12 mm GS FLAT.
18. ALL JUNCTION BOXES, OPERATING MECHANISMS BOXES ETC SHALL BE EARTHED AT ONE POINT WITH 50X6mm FLAT AND MARSHALLING KIOSKS, GROUND MOUNTED AND CONTROL CABINETS, PANELS SHALL BE EARTHED AT TWO POINTS WITH 50X6 mm GS FLAT.
19. EQUIPMENT RISERS WILL BE SHOWN IN NEXT REVISION OF THIS DOCUMENT.
20. MAIN EARTHMAT QUANTITY IS SPECIFIED IN THIS LAYOUT. ALL OTHER EARTHMAT RISERS AND OTHER ITEMS WILL BE SUBMITTED SEPARATELY AFTER FINALIZATION OF EARTHMAT LAYOUT.

EARTHING BOQ:–

DESCRIPTION	QUANTITY
MAIN EARTH GRID–40mmø MS ROD LENGTH	5780 Mtr.

Refer Comment (5)

LEGENDS:–

- EXISTING EARTH GRID–40mmø MS ROD
- MAIN EARTH GRID–40mmø MS ROD
- EARTHING RISER
- EARTHING RISER POINT
- (E) 40mm DIA. ROD EARTH ELECTRODE

REF. DRAWINGS:–

DRG. NO.	DRG. TITLE
KEC–A775–776–ALG–01–0011 REV.–02	OVERALL GENERAL ARRANGEMENT LAYOUT PLAN
015141–E–IS–SY–GL–1014 REV.–A	765kV ALIGARH GIS SUBSTATION OVERALL EARTHING LAYOUT
C/ENGG.SS/NR–1/765–400kVGIS/ ALIGARH/GA	765/400kV GENERAL ARRANGEMENT DIAGRAM
015141–E–IS–SY–LP–1010 REV.–A	765kV ALIGARH GIS SUBSTATION DIRECT STROKE LIGHTNING PROTECTION LAYOUT
KEC–A775–776–ALG–02–5021 REV.–00	DSLP LAYOUT (OUTDOOR AND BUILDING)

REVISION NOTE:–

1. THE MAIN EARTHMAT IS EXTENDED FROM PRESENT BAY AREA SCOPE TO ADJACENT FENCE AFTER PGCIL COMMENTS ON REVISION–00.

(1) All earthing shall be done as per TS section, Switchyard Erection Rev 10.
(2) GIS earthing shall be submitted and approved separately.
(3) Auxiliary Earthmat inside GIS hall is not part of main Earthmat. Kindly revise quantity.

REV.	DESCRIPTION	PREP.	CHKD.	APPD.	DATE
R1	REVISED AS PER PGCIL COMMENTS	PK	RS	SB	13.11.17
R0	FIRST SUBMISSION	PK	RS	SB	06.09.17

SIGN.

CUSTOMER	POWER GRID CORPORATION OF INDIA LTD.
MAIN CONTRACTOR	NEW NORTHEAST ELECTRIC GROUP HIGH VOLTAGE
ASSOCIATE CONTRACTOR	KEC INTERNATIONAL LTD. 8TH FLOOR, BUILDING No. 9A, DLF CYBER CITY, PHASE III, GURGAON (HARYANA) – 122002
NOA–I : OFF–SHORE SUPPLY	CC–CS/706–NR3/GIS–3541/3/G6/NOA–I/7262
NOA–II : ON–SHORE SUPPLY	CC–CS/706–NR3/GIS–3541/3/G6/NOA–II/7263
NOA–III : ON–SHORE SUPPLY	CC–CS/706–NR3/GIS–3541/3/G6/NOA–III/7264
SPEC. NO:	CC–CS/706–NR3/GIS–3541/3/G6
PROJECT	GIS SUBSTATION PACKAGE–SS01(PACKAGE ID: RTN1000418) FOR (1) 765/400kV ALIGARH (PG) (GIS) SUBSTATION EXTENSION AND 400kV NEEMRANA SUBSTATION EXTENSION UNDER NRSS–XXXVIII (TR–201510), AND (2) 400kV KOTESHWAR (GIS) POOLING STATION EXTENSION UNDER NRSS–XXXVI (TR–201509)
SUBSTATION	765kV (EXTN.)/400kV (NEW) ALIGARH GIS SIBSTATION
DRG. TITLE	MAIN EARTHMAT LAYOUT
DRG. NO.:	KEC–A775–776–ALG–02–5022
SCALE: 1:700	JOB NO: SHEET: 01 OF 01

A1: 841mm x 594mm

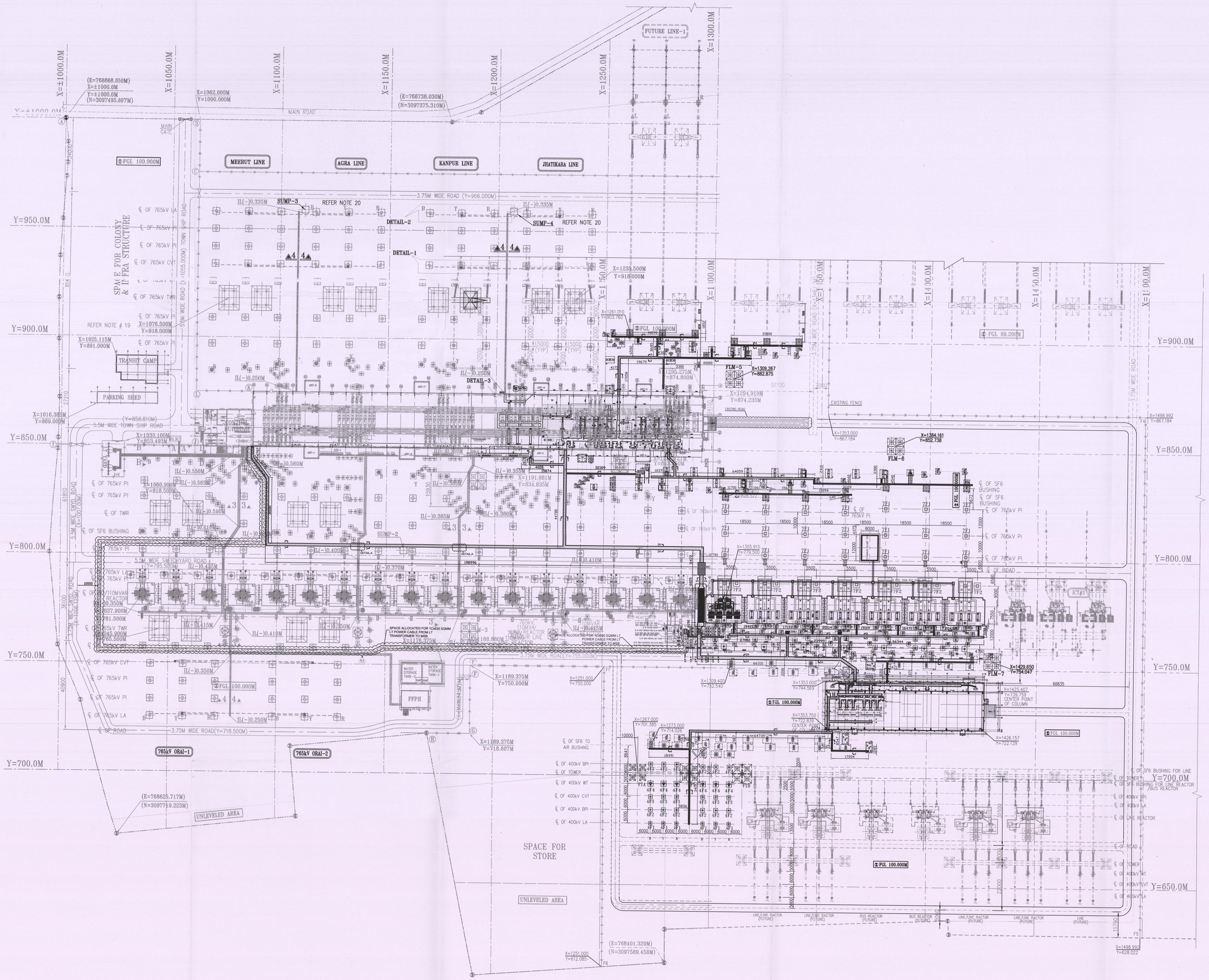

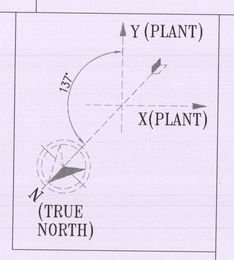

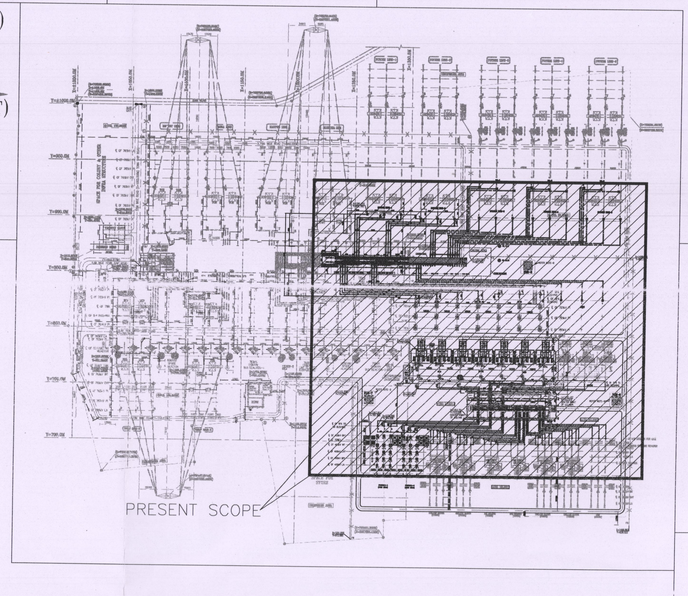

NOTES:–

1. ALL DIMENSIONS ARE IN MM & LEVELS IN METERS.
2. CABLE TRENCH SECTIONS & CROSSINGS OF ROAD SHALL BE AS PER POWER GRID STANDARD DRAWING. DRAWING NO: C/ENGG/STD/CT–1, 2, 3, 4 & 5
3. POWER & CONTROL CABLES SHALL BE LAID IN SEPARATE TIERS IN CABLE TRENCH. POWER CABLES SHALL BE LAID IN TOP TIERS. CONTROL CABLES SHALL BE LAID IN BOTTOM TIERS INSIDE THE CABLE TRENCH.
4. FIBRE OPTIC CABLE SHALL BE RUN THROUGH G.I PIPE AND SHALL BE LAID ALONG WITH CONTROL CABLES AND MAINTAINING CLEAN GAP OF 100mm BETWEEN F.O CABLE AND CONTROL CABLE.
5. TRENCH SHALL BE CLOSE TO EQUIPMENT AS FAR AS POSSIBLE BUT AWAY BY A MIN. OF 100mm. IF ANY OF THE TRENCH IS FOULING WITH ANY OF FOUNDATIONS, IT MAY BE REROUTED AT SITE TO SUIT SITE CONDITIONS.
6. WHENEVER FUTURE TRENCH BRANCHES FROM THE MAIN TRENCH, BRICK WALL/SUITABLE OPENING SHALL BE PROVIDED FOR CONSTRUCTING FUTURE TRENCH.
7. AFTER LAYING CABLES, THE END OF PIPES SHALL BE SUITABLY SEALED AT SITE TO PREVENT INGRESS OF WATER INSIDE THE PIPES.
8. LIGHTING & OTHER POWER CABLES SHALL BE DIRECTLY BURIED WHEREVER THERE IS NO AVAILABLE CABLE TRENCH.
9. SEPARATE PVC PIPES SHALL BE LAID FOR TAKING POWER AND CONTROL CABLE. PVC PIPES SHALL BE BURIED AT A DEPTH OF 200–250MM FROM TRENCH COVER TOP.
10. SUITABLE OPENING SHALL BE PROVIDED IN CABLE TRENCH AT APPROPRIATE LOCATION FOR CABLE ENTRY & EXIT.
11. CABLE TRENCH INTERCONNECTION BETWEEN GIS HALL, RELAY PANEL ROOM AND OUTDOOR SHALL BE SHOWN IN INDOOR CABLE TRENCH DRAWING.
12. THIS DRAWING HAS TO BE REFERRED FOR CABLE TRENCH ROUTING LAYOUT ONLY AND FOR OTHER CONSTRUCTION DETAILS RELATED TO CIVIL WORK REFER RELEVANT CIVIL DRAWINGS/PGCIL ISSUED DRAWINGS.
13. FOR DETAIL OF CABLE TRENCH SECTIONS & SUMP PIT DETAIL REFER PGCIL STANDARD DWG.
14. TENTATIVE LOCATION OF COMMON MARSHALING BOX (CMB) FOR ICT AND BUS REACTOR IS MARKED IN THE TRENCH LAYOUT DRAWING. SAME SHALL BE CONFIRMED FROM ~~PGCIL/TRANSFORMER MANUFACTURER~~.
15. CABLE PULL PIT SHALL BE SUITABLY CONSTRUCTED AT SITE.
16. CABLE SEALING SYSTEM DETAILS SHALL BE SUBMITTED SEPARATELY.
17. 765kV & 400kV INDOOR CABLE TRENCH LAYOUT/DETAILS SHALL BE SUBMITTED SEPARATELY.
18. ROUTING OF PD AND GAS DENSITY SENSORS AT OUTDOOR 765kV AND 400kV GIS DUCTS WILL BE SUBMITTED IN SEPARATE DRAWING.
19. KINDLY REFER THIS LAYOUT FOR CABLE TRENCH PURPOSE ONLY. FOR ANY FOUNDATION DETAILS, REFER CIVIL FOUNDATION LAYOUT.

Mark location of Sump Pits.

LEGENDS:–

- PROPOSED CABLE TRENCH
- EXISTING CABLE TRENCH
- CABLE PULL PIT
- RC — ROAD CROSSING
- TRANSFORMER/REACTOR COMMON MARSHALING BOX (CMB) (NOT IN KEC SCOPE OF SUPPLY)
- 100MM. DIA PVC PIPE (P2–100mmø)
- 50MM. DIA PVC PIPE (P1–50mmø)
- JB — JUNCTION BOX
- CABLE PULL CHAMBER

PVC PIPE DETAILS:

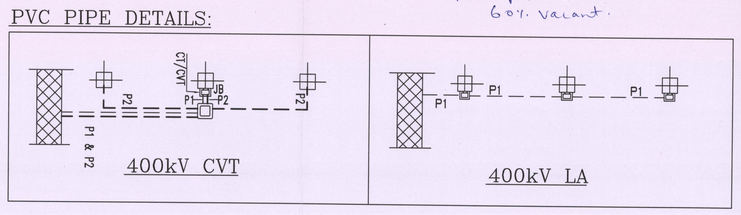

R/C pipes shall be 60% vacant.

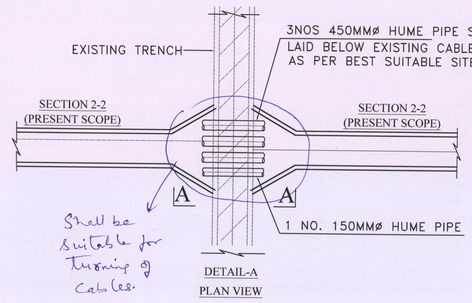

Shall be suitable for Turning of Cables.

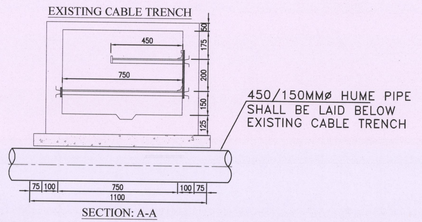

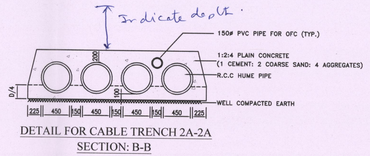

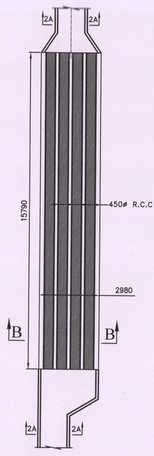

REV.	DESCRIPTION	PREP.	CHKD.	APPD.	DATE
R3	REVISED AS PER PGCIL COMMENTS	PK	RS	SB	08.06.18
R2	REVISED AS PER PGCIL COMMENTS	RS	RS	SB	25.05.18
R1	REVISED AS PER PGCIL COMMENTS	PK	RS	SB	01.02.18
R0	FIRST SUBMISSION	PK	RS	SB	29.01.18

CUSTOMER	POWER GRID CORPORATION OF INDIA LTD.
MAIN CONTRACTOR	NEW NORTHEAST ELECTRIC GROUP HIGH VOLTAGE
ASSOCIATE CONTRACTOR	KEC INTERNATIONAL LTD. 8th FLOOR, BUILDING No. 9A, DLF CYBER CITY, PHASE III, GURGAON (HARYANA) – 122002
NOA–I : OFF–SHORE SUPPLY	CC–CS/706–NR3/GIS–3541/3/G6/NOA–I/7262
NOA–II : ON–SHORE SUPPLY	CC–CS/706–NR3/GIS–3541/3/G6/NOA–II/7263
NOA–III : ON–SHORE SUPPLY	CC–CS/706–NR3/GIS–3541/3/G6/NOA–III/7264
SPEC. NO:	CC–CS/706–NR3/GIS–3541/3/G6
PROJECT	GIS SUBSTATION PACKAGE–SS01(PACKAGE ID: RTN1000418) FOR (1) 765/400kV ALIGARH (PG) (GIS) SUBSTATION EXTENSION AND 400kV NEEMRANA SUBSTATION EXTENSION UNDER NRSS–XXXVIII (TR–201510), AND (2) 400kV KOTESHWAR (GIS) POOLING STATION EXTENSION UNDER NRSS–XXXVI (TR–201509)
SUBSTATION	765kV (EXTN.)/400kV (NEW) ALIGARH GIS SIBSTATION
DRG. TITLE	OUTDOOR CABLE TRENCH LAYOUT
DRG. NO.:	KEC–A775–776–ALG–04–5041
SCALE: 1:700	JOB NO: SHEET: 01 OF 01

AD: 1189mm x 841mm